These traditional cup-shaped vacuum cups are suited for gripping and handling small objects with flat, slightly concave or convex surfaces.
This series of widely used cups have diameters ranging from 4 to 9 mm and are normally available in standard compounds: natural para rubber N, oil-resistant rubber A and silicon S. They can be cold-assembled with no adhesive onto a nickel-plated brass support.
The support has been specially shaped to perfectly fit with the cup and it is equipped with a male threaded pin to optimise the fastening to the machine.
These cups are extremely easy to replace; for the spare part, in fact, all you have to do is request the cup indicated in the table in the desired compound.
Cups in special compounds indicated at page 21 and supports in different materials can be provided upon request in minimum quantities to be defined in the order.

CUPS

Art.	Force Kg	A Ø	B Ø	D Ø	E	F	H
01 04 10 *	0.03	3	1.5	4	6.0	7.0	7.5
01 05 10 *	0.05	3	1.5	5	6.0	7.0	8.0
01 06 10 *	0.07	3	1.5	6	6.0	7.0	8.0
01 07 07 *	0.10	5	2.0	7	6.0	6.0	7.0
01 08 10 *	0.12	5	2.5	8	6.0	7.0	8.0
01 09 07 *	0.15	5	2.0	9	5.5	6.0	7.0

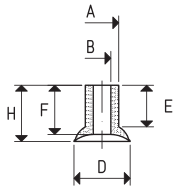

* Complete the code indicating the compound: A= oil-resistant rubber; N= natural para rubber; S= silicon

SUPPORTS

Art.	A Ø	B Ø	D Ø	E	F	G	H	Support material	Cup art.	Weight g
00 08 01	M5	7	2.90	3	5	10	18	brass	01 04 10 01 05 10 01 06 10	4
00 08 02	M5	7	4.75	3	5	10	18	brass	01 07 07 01 08 10 01 09 07	4

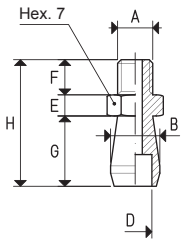

CUPS WITH SUPPORT

Art.	Force Kg	A Ø	B Ø	D Ø	E	F	G	H	Cup Art.	Support Art.	Weight g
08 04 10 *	0.03	M5	7	4	3	5	13.0	21.0	01 04 10	00 08 01	4
08 05 10 *	0.05	M5	7	5	3	5	13.5	21.5	01 05 10	00 08 01	4
08 06 10 *	0.07	M5	7	6	3	5	13.5	21.5	01 06 10	00 08 01	4
08 07 07 *	0.10	M5	7	7	3	5	13.5	21.5	01 07 07	00 08 02	4
08 08 10 *	0.12	M5	7	8	3	5	13.5	21.5	01 08 10	00 08 02	4
08 09 07 *	0.15	M5	7	9	3	5	12.5	20.5	01 09 07	00 08 02	4

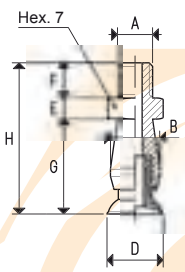

* Complete the code indicating the compound: A= oil-resistant rubber; N= natural para rubber; S= silicon

Conversion ratio: inch $\frac{mm}{25.4}$ pounds = $\frac{g}{453.6} = \frac{Kg}{0.4536}$

GAS-NPT thread adapters available at page 1.117

These traditional cup-shaped vacuum cups are suited for gripping and handling small objects with flat, slightly concave or convex surfaces.
This series of widely used cups have diameters ranging from 10 to 45 mm and are normally available in standard compounds: natural para rubber N, oil-resistant rubber A and silicon S.
They can be cold-assembled with no adhesive onto a nickel-plated brass or anodised aluminium support. The support has been specially shaped to perfectly fit with the cup and it is equipped with a male threaded pin to optimise the fastening to the machine.
These cups are extremely easy to replace; for the spare part, in fact, all you have to do is request the cup indicated in the table in the desired compound.
Cups in special compounds indicated at page 21 and supports in different materials can be provided upon request in minimum quantities to be defined in the order.

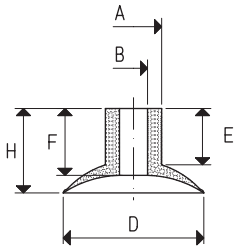

CUPS

Art.	Force Kg	A Ø	B Ø	D Ø	E	F	H
01 10 10 *	0.19	7	4.0	10	8.5	8.5	11.0
01 12 10 *	0.28	8	4.0	12	8.0	9.0	11.0
01 15 10 *	0.44	8	4.0	15	8.0	9.5	12.0
01 18 10 *	0.63	8	4.0	18	8.0	9.5	12.0
01 20 10 *	0.78	8	4.0	20	8.0	9.5	12.0
01 22 10 *	0.95	8	4.0	22	8.0	10.0	13.0
01 25 15 *	1.23	12	6.0	25	10.0	11.5	16.0
01 30 15 *	1.76	12	6.0	30	10.0	12.5	17.0
01 35 15 *	2.40	15	10.0	35	10.0	11.5	16.0
01 40 15 *	3.14	15	10.0	40	10.0	12.5	18.0
01 45 15 *	3.98	15	10.0	45	10.0	14.5	23.0

* Complete the code indicating the compound: A= oil-resistant rubber; N= natural para rubber; S= silicon

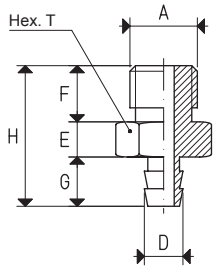

SUPPORTS

Art.	A Ø	D Ø	E	F	G	H	T	Support material	Cup art.	Weight g
00 08 03	G1/8"	5.5	5	8	7.0	20.0	12	brass	01 10 10	9
									01 12 10	
									01 15 10	
									01 18 10	
									01 20 10	
									01 22 10	
00 08 05	G1/8"	7.5	5	8	9.5	22.5	12	brass	01 25 15	10
									01 30 15	
00 08 20	G1/4"	12.0	8	14	10.0	32.0	17	aluminium	01 35 15	11
									01 40 15	
									01 45 15	

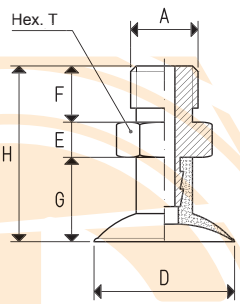

CUPS WITH SUPPORT

Art.	Force Kg	A Ø	D Ø	E	F	G	H	T	Cup Art.	Support Art.	Weight g
08 10 10 *	0.19	G1/8"	10	5	8	11	24	12	01 10 10	00 08 03	9.0
08 12 10 *	0.28	G1/8"	12	5	8	11	24	12	01 12 10	00 08 03	9.6
08 15 10 *	0.44	G1/8"	15	5	8	12	25	12	01 15 10	00 08 03	9.7
08 18 10 *	0.63	G1/8"	18	5	8	12	25	12	01 18 10	00 08 03	9.7
08 20 10 *	0.78	G1/8"	20	5	8	12	25	12	01 20 10	00 08 03	9.8
08 22 10 *	0.95	G1/8"	22	5	8	13	26	12	01 22 10	00 08 03	10.2
08 25 15 *	1.23	G1/8"	25	5	8	16	29	12	01 25 15	00 08 05	12.0
08 30 15 *	1.76	G1/8"	30	5	8	17	30	12	01 30 15	00 08 05	12.7
08 35 15 *	2.40	G1/4"	35	8	14	16	38	17	01 35 15	00 08 20	13.6
08 40 15 *	3.14	G1/4"	40	8	14	18	40	17	01 40 15	00 08 20	14.1
08 45 15 *	3.98	G1/4"	45	8	14	23	45	17	01 45 15	00 08 20	17.6

* Complete the code indicating the compound: A= oil-resistant rubber; N= natural para rubber; S= silicon

Conversion ratio: inch = $\frac{mm}{25.4}$; pounds = $\frac{g}{453.6} = \frac{Kg}{0.4536}$

GAS - NPT thread adapters available at page 1.117

CUPS WITH SUPPORT

These traditional cup-shaped vacuum cups are suited for gripping and handling small objects with flat, slightly concave or convex surfaces.
This series of widely used cups have diameters ranging from 10 to 45 mm and are normally available in standard compounds: natural para rubber N, oil-resistant rubber A and silicon S.
They can be cold-assembled with no adhesive onto a nickel-plated brass or anodised aluminium support.
The support has been specially shaped to perfectly fit with the cup and it is equipped with a male threaded pin to optimise the fastening to the machine.
These cups are extremely easy to replace; for the spare part, in fact, all you have to do is request the cup indicated in the table in the desired compound.
Cups in special compounds indicated at page 21 and supports in different materials can be provided upon request in minimum quantities to be defined in the order.

CUPS

Art.	Force Kg	A Ø	B Ø	D Ø	E	F	H
01 10 10 *	0.19	7	4.0	10	8.5	8.5	11.0
01 12 10 *	0.28	8	4.0	12	8.0	9.0	11.0
01 15 10 *	0.44	8	4.0	15	8.0	9.5	12.0
01 18 10 *	0.63	8	4.0	18	8.0	9.5	12.0
01 20 10 *	0.78	8	4.0	20	8.0	9.5	12.0
01 22 10 *	0.95	8	4.0	22	8.0	10.0	13.0
01 25 15 *	1.23	12	6.0	25	10.0	11.5	16.0
01 30 15 *	1.76	12	6.0	30	10.0	12.5	17.0
01 35 15 *	2.40	15	10.0	35	10.0	11.5	16.0
01 40 15 *	3.14	15	10.0	40	10.0	12.5	18.0
01 45 15 *	3.98	15	10.0	45	10.0	14.5	23.0

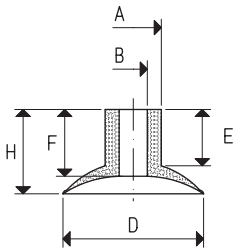

* Complete the code indicating the compound: A= oil-resistant rubber; N= natural para rubber; S= silicon

SUPPORTS

Art.	A Ø	D Ø	E	F	G	H	T	Support material	Cup art.	Weight g
00 08 04	G1/8"	5.5	13	10	7.0	20.0	12	brass	01 10 10	8.1
									01 12 10	
									01 15 10	
									01 18 10	
									01 20 10	
									01 22 10	
00 08 14	G1/8"	7.5	13	10	9.5	22.5	12	brass	01 25 15	9.8
									01 30 15	
00 08 21	G1/4"	12.0	17	13	10.0	27.0	17	aluminium	01 35 15	9.3
									01 40 15	
									01 45 15	

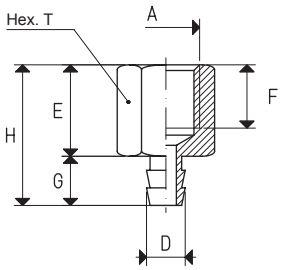

CUPS WITH SUPPORT

Art.	Force Kg	A Ø	D Ø	E	F	G	H	T	Cup Art.	Support Art.	Weight g
08 10 25 *	0.19	G1/8"	10	13	10	11	24	12	01 10 10	00 08 04	8.1
08 12 25 *	0.28	G1/8"	12	13	10	11	24	12	01 12 10	00 08 04	8.7
08 15 25 *	0.44	G1/8"	15	13	10	12	25	12	01 15 10	00 08 04	8.8
08 18 25 *	0.63	G1/8"	18	13	10	12	25	12	01 18 10	00 08 04	8.8
08 20 25 *	0.78	G1/8"	20	13	10	12	25	12	01 20 10	00 08 04	9.3
08 22 25 *	0.95	G1/8"	22	13	10	13	26	12	01 22 10	00 08 04	9.3
08 25 25 *	1.23	G1/8"	25	13	10	16	29	12	01 25 15	00 08 14	11.8
08 30 25 *	1.76	G1/8"	30	13	10	17	30	12	01 30 15	00 08 14	12.5
08 35 25 *	2.40	G1/4"	35	17	13	16	33	17	01 35 15	00 08 21	11.9
08 40 25 *	3.14	G1/4"	40	17	13	18	35	17	01 40 15	00 08 21	12.4
08 45 25 *	3.98	G1/4"	45	17	13	23	40	17	01 45 15	00 08 21	15.9

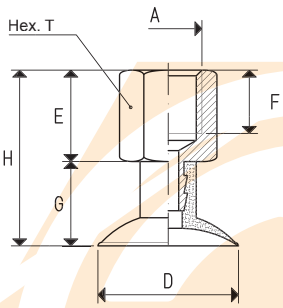

* Complete the code indicating the compound: A= oil-resistant rubber; N= natural para rubber; S= silicon

Conversion ratio: inch = $\frac{mm}{25.4}$; pounds = $\frac{g}{453.6} = \frac{Kg}{0.4536}$

GAS - NPT thread adapters available at page 1.117

These traditional cup-shaped vacuum cups are suited for gripping and handling small objects with flat, slightly concave or convex surfaces.
This series of widely used cups have diameters ranging from 25 to 35 mm and are normally available in standard compounds: natural para rubber N, oil-resistant rubber A and silicon S.
They can be cold-assembled with no adhesive onto a nickel-plated brass support.
The support has been specially shaped to perfectly fit with the cup and it is equipped with a male threaded pin to optimise the fastening to the machine.
These cups are extremely easy to replace; for the spare part, in fact, all you have to do is request the cup indicated in the table in the desired compound.
Cups in special compounds indicated at page 21 and supports in different materials can be provided upon request in minimum quantities to be defined in the order..

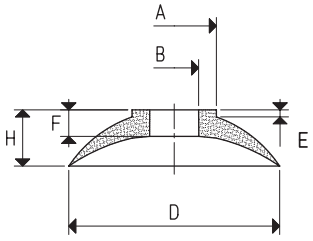

CUPS

Art.	Force Kg	A Ø	B Ø	D Ø	E	F	H
01 25 10 *	1.23	12	6	25	2	3.5	8
01 30 10 *	1.76	12	6	30	1	3.5	8
01 35 10 *	2.40	12	6	35	1	3.5	8

* Complete the code indicating the compound: A= oil-resistant rubber; N= natural para rubber; S= silicon

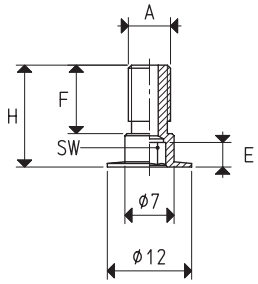

SUPPORTS

Art.	A Ø	E	F	H	SW	Support material	Cup art.	Weight g
00 08 08	M6	3.5	10	14.5	3	brass	01 25 10 01 30 10 01 35 10	2.7
00 08 60	G1/8"	4.0	10	14.5	4	brass	01 25 10 01 30 10 01 35 10	5.6

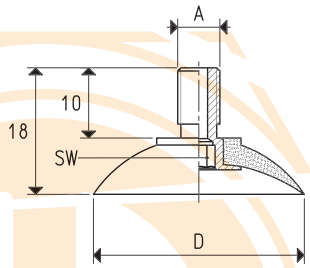

CUPS WITH SUPPORT

Art.	Force Kg	A Ø	SW	D Ø	Cup Art.	Support Art.	Weight g
08 25 10 *	1.23	M6	3	25	01 25 10	00 08 08	3.9
08 25 11 *	1.23	G1/8"	4	25	01 25 10	00 08 60	6.8
08 30 10 *	1.76	M6	3	30	01 30 10	00 08 08	4.6
08 30 11 *	1.76	G1/8"	4	30	01 30 10	00 08 60	7.5
08 35 10 *	2.40	M6	3	35	01 35 10	00 08 08	5.1
08 35 11 *	2.40	G1/8"	4	35	01 35 10	00 08 60	8.0

* Complete the code indicating the compound: A= oil-resistant rubber; N= natural para rubber; S= silicon

Conversion ratio: inch = $\frac{mm}{25.4}$; pounds = $\frac{g}{453.6} = \frac{Kg}{0.4536}$

GAS - NPT thread adapters available at page 1.117

CUPS WITH SUPPORT

These traditional cup-shaped vacuum cups are suited for gripping and handling small objects with flat, slightly concave or convex surfaces.
This series of widely used cups have diameters ranging from 45 to 60 mm and are normally available in standard compounds: natural para rubber N, oil-resistant rubber A and silicon S.
They can be cold-assembled with no adhesive onto an anodised aluminium support.
The support has been specially shaped to perfectly fit with the cup and it is equipped with a male threaded pin to optimise the fastening to the machine. Moreover, those with ¼" thread have an M8 threaded hole, to allow the possible insertion of a calibrated grub screw (see page 1.118) to reduce the amount of sucked air.
These cups are extremely easy to replace; for the spare part, in fact, all you have to do is request the cup indicated in the table in the desired compound.
Cups in special compounds indicated at page 21 and supports in different materials can be provided upon request in minimum quantities to be defined in the order.

CUPS

Art.	Force	A	B	C	D	E	F	G	H	I
	Kg	Ø	Ø	Ø	Ø					
01 45 10 *	3.98	15	10	--	45	5	9.5	--	18	--
01 60 10 *	7.06	15	10	25	60	4	--	10	22	2.5

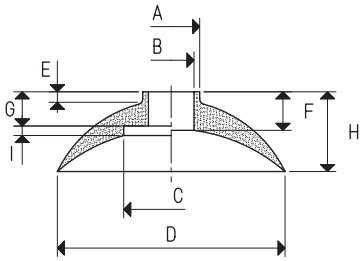

* Complete the code indicating the compound: A= oil-resistant rubber; N= natural para rubber; S= silicon

SUPPORTS

Art.	A	E	C	Support	Cup	Weight
	Ø		Ø	material	art.	g
00 08 22	G1/4"	10	M8	aluminium	01 45 10	5.9
					01 60 10	
00 08 44	G1/8"	--	--	aluminium	01 45 10	5.1
					01 60 10	
00 08 313	M6	--	--	brass	01 45 10	3.3
					01 60 10	
00 08 314	M8	--	--	brass	01 45 10	4.3
					01 60 10	
00 08 92	M10	--	--	brass	01 45 10	5.2
					01 60 10	

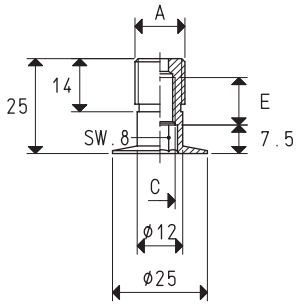

CUPS WITH SUPPORT

Art.	Force	A	D	M	Cup	Support	Weight
	Kg	Ø	Ø	Ø	Art.	Art.	g
08 45 10 *	3.98	G1/4"	45	M8	01 45 10	00 08 22	12.6
08 45 11 *	3.98	G1/8"	45	--	01 45 10	00 08 44	11.8
08 45 12 *	3.98	M6	45	--	01 45 10	00 08 313	10.0
08 45 13 *	3.98	M8	45	--	01 45 10	00 08 314	11.0
08 45 14 *	3.98	M10	45	--	01 45 10	00 08 92	11.9

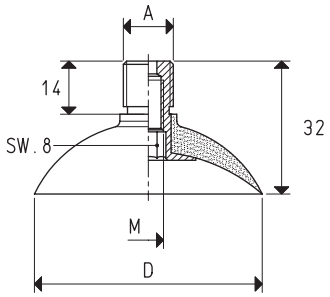

* Complete the code indicating the compound: A= oil-resistant rubber; N= natural para rubber; S= silicon

CUPS WITH SUPPORT

Art.	Force	A	D	M	Cup	Support	Weight
	Kg	Ø	Ø	Ø	Art.	Art.	g
08 60 10 *	7.06	G1/4"	60	M8	01 60 10	00 08 22	20.8
08 60 11 *	7.06	G1/8"	60	--	01 60 10	00 08 44	20.0
08 60 12 *	7.06	M6	60	--	01 60 10	00 08 313	18.2
08 60 13 *	7.06	M8	60	--	01 60 10	00 08 314	19.2
08 60 14 *	7.06	M10	60	--	01 60 10	00 08 92	20.1

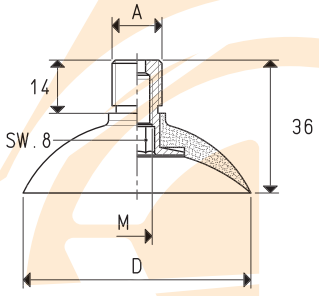

* Complete the code indicating the compound: A= oil-resistant rubber; N= natural para rubber; S= silicon

Conversion ratio: inch = $\frac{mm}{25.4}$; pounds = $\frac{g}{453.6} = \frac{Kg}{0.4536}$

GAS - NPT thread adapters available at page 1.117

These traditional cup-shaped vacuum cups are suited for gripping and handling small objects with flat, slightly concave or convex surfaces.
This series of widely used cups have diameters of 85 mm and are normally available in standard compounds: natural para rubber N, oil-resistant rubber A and silicon S.
They can be cold-assembled with no adhesive onto an anodised aluminium support.
The support has been specially shaped to perfectly fit with the cup and it is equipped with a male threaded pin to optimise the fastening to the machine. Moreover, those with ¼" thread have an M8 threaded hole, to allow the possible insertion of a calibrated grub screw (see page 1.118) to reduce the amount of sucked air.
These cups are extremely easy to replace; for the spare part, in fact, all you have to do is request the cup indicated in the table in the desired compound.
Cups in special compounds indicated at page 21 and supports in different materials can be provided upon request in minimum quantities to be defined in the order.

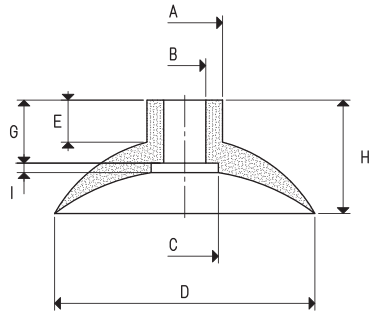

CUPS

Art.	Force	A	B	C	D	E	G	H	I
	Kg	Ø	Ø	Ø	Ø				
01 85 10 *	14.18	25	15	25	85	16	23	41	4.0

* Complete the code indicating the compound: A= oil-resistant rubber; N= natural para rubber; S= silicon

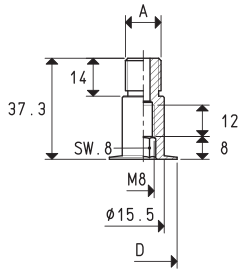

SUPPORTS

Art.	A	D	Support	Cup	Weight
	Ø	Ø	material	art.	g
00 08 28	G1/4"	25	aluminium	01 85 10	13.4
00 08 136	G1/8"	25	aluminium	01 85 10	9.2

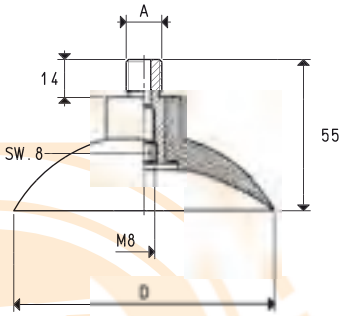

CUPS WITH SUPPORT

Art.	Force	A	D	Cup	Support	Weight
	Kg	Ø	Ø	Art.	Art.	g
08 85 10 *	14.18	G1/4"	85	01 85 10	00 08 28	49.3
08 85 12 *	14.18	G1/8"	85	01 85 10	00 08 136	45.1

* Complete the code indicating the compound: A= oil-resistant rubber; N= natural para rubber; S= silicon

Conversion ratio: inch = $\frac{mm}{25.4}$; pounds = $\frac{g}{453.6} = \frac{Kg}{0.4536}$

GAS - NPT thread adapters available at page 1.117

These traditional cup-shaped vacuum cups are suited for gripping and handling small objects with flat, slightly concave or convex surfaces.
This series of widely used cups have diameters of 85 mm and are normally available in standard compounds: natural para rubber N, oil-resistant rubber A and silicon S.
They can be cold-assembled with no adhesive onto an anodised aluminium support.
IThe support has been specially shaped to perfectly fit with the cup and it is equipped with a female threaded pin to optimise the fastening to the machine.
These cups are extremely easy to replace; for the spare part, in fact, all you have to do is request the cup indicated in the table in the desired compound.
Cups in special compounds indicated at page 21 and supports in different materials can be provided upon request in minimum quantities to be defined in the order.

CUPS

Art.	Force	A	B	C	D	E	G	H	I
	Kg	Ø	Ø	Ø	Ø				
01 85 10 *	14.18	25	15	25	85	16	23	41	4.0

* Complete the code indicating the compound: A= oil-resistant rubber; N= natural para rubber; S= silicon

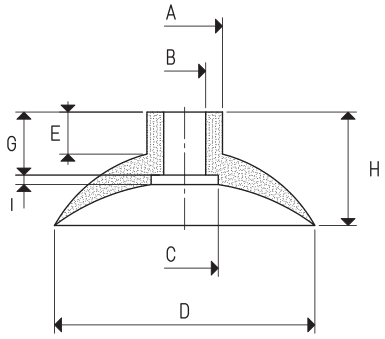

SUPPORTS

Art.	A	B	Support	Cup	Weight
	Ø	Ø	material	art.	g
00 08 29	15.5	M12	aluminium	01 85 10	6.6
00 08 46	15.5	G1/4"	aluminium	01 85 10	6.5

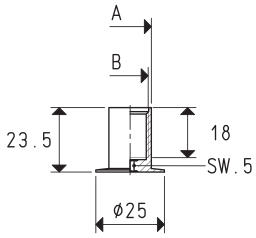

CUPS WITH SUPPORT

Art.	Force	A	D	H	Cup	Support	Weight
	Kg	Ø	Ø		Art.	Art.	g
08 85 25 *	14.18	G1/4"	85	41	01 85 10	00 08 46	42.4
08 85 26 *	14.18	M12	85	41	01 85 10	00 08 29	42.5

* Complete the code indicating the compound: A= oil-resistant rubber; N= natural para rubber; S= silicon

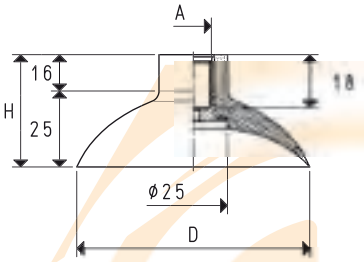

Conversion ratio: inch = $\frac{mm}{25.4}$; pounds = $\frac{g}{453.6} = \frac{Kg}{0.4536}$

GAS - NPT thread adapters available at page 1.117

These sturdy and rather deep cups are designed to handle bodywork components in moulded sheet steel.
These cups are produced with a special compound called BENZ, which can resist to heavy loads and to the chlorine usually contained in the oil used for moulding and drawing of the sheet steel.
The galvanised steel support is vulcanised onto the cup. Galvanised steel adapters are also available to allow modifying the suction connection from M10 to gas or NPT threads.
Cups in special compounds indicated at page 21 can be provided upon request in minimum quantities to be defined in the order.

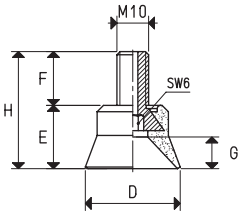

CUPS WITH VULCANISED SUPPORT

Art.	Force Kg	D Ø	E	F	G	H	Support material	Weight g
08 30 38 *	1.80	30	20	17	10	37	steel	20.8
08 40 41 *	3.20	40	23	18	12	41	steel	24.9

* Complete the code indicating the compound: B= BENZ rubber; N= natural para rubber; S= silicon

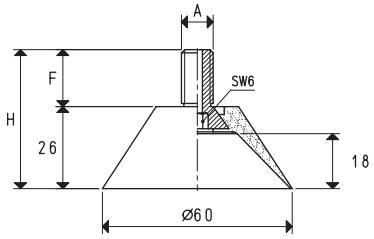

CUPS WITH VULCANISED SUPPORT

Art.	Force Kg	A Ø	F	H	Support material	Weight g
08 60 45 *	7.10	M10	18	44	steel	29.5
08 60 45 1/4" *	7.10	G1/4"	10	36	steel	34.4

* Complete the code indicating the compound: B= BENZ rubber; N= natural para rubber; S= silicon

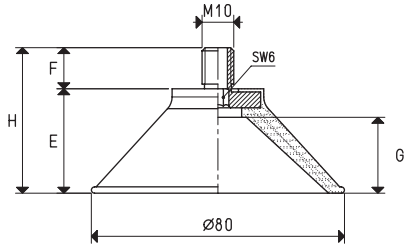

CUPS WITH VULCANISED SUPPORT

Art.	Force Kg	E	F	G	H	Support material	Weight g
08 80 50 *	12.60	33	18	26	51	steel	58.0

* Complete the code indicating the compound: B= BENZ rubber; N= natural para rubber; S= silicon

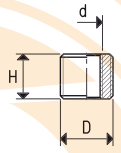

REDUCTIONS

Art.	D Ø	d Ø	H	Reduction material	Weight g
00 08 130 *	G1/4"	M10	14	steel	4.9
00 08 131 *	G3/8"	M10	14	steel	12.8
00 08 254 *	1/4" NPT	M10	14	steel	4.8
00 08 255 *	3/8" NPT	M10	14	steel	12.7

Conversion ratio: inch = $\frac{mm}{25.4}$; pounds = $\frac{g}{453.6} = \frac{Kg}{0.4536}$

GAS - NPT thread adapters available at page 1.117

These cups are specially designed for gripping moulded or drawn sheet metal and are largely used in the automotive sector. Their ground lip allows an immediate gripping of the load to be lifted as soon as contact is made and ensures perfect vacuum seal.

These cups are produced in a special compound called BENZ, able to withstand chlorine usually contained in the oils used for moulding and drawing the sheet metal.

The galvanised steel support is vulcanised onto the cup. They are obviously available also in natural para rubber and silicon.

CUPS WITH MALE VULCANISED SUPPORT

Art.	Force Kg	A Ø	B Ø	C	D Ø	E	G	H	Support material	Weight g
08 50 40 *	4.90	31	G3/8"	--	50	16.0	6.5	29.0	steel	38.5
08 50 40 GR *	4.90	31	G3/8"	G1/8"	50	16.0	6.5	29.0	steel	38.5
08 75 40 *	11.04	31	G3/8"	--	75	25.0	9.0	38.0	steel	57.9
08 75 40 GR *	11.04	31	G3/8"	G1/8"	75	25.0	9.0	38.0	steel	57.9
08 100 40 *	19.62	32	G3/8"	--	100	26.0	9.0	39.0	steel	78.3
08 100 40 GR *	19.62	32	G3/8"	G1/8"	100	26.0	9.0	39.0	steel	78.3
08 100 50 *	19.62	32	G3/8"	--	100	30.5	15.0	43.5	steel	74.8
08 100 50 GR *	19.62	32	G3/8"	G1/8"	100	30.5	15.0	43.5	steel	74.8
08 50 40 1/4" *	4.90	31	G1/4"	--	50	16.0	6.5	29.0	steel	37.4
08 75 40 1/4" *	11.04	31	G1/4"	--	75	25.0	9.0	38.0	steel	57.6
08 100 40 1/4" *	19.62	32	G1/4"	--	100	26.0	9.0	39.0	steel	76.8
08 100 50 1/4" *	19.62	32	G1/4"	--	100	30.5	15.0	43.5	steel	74.3
08 50 40 M10 *	4.90	31	M10	--	50	16.0	6.5	29.0	steel	32.7
08 75 40 M10 *	11.04	31	M10	--	75	25.0	9.0	38.0	steel	49.9
08 100 40 M10 *	19.62	32	M10	--	100	26.0	9.0	39.0	steel	72.1
08 100 50 M10 *	19.62	32	M10	--	100	30.5	15.0	43.5	steel	70.2
08 50 40 M14 *	4.90	31	M14 x 1.5	--	50	16.0	6.5	29.0	steel	34.8
08 75 40 M14 *	11.04	31	M14 x 1.5	--	75	25.0	9.0	38.0	steel	54.9
08 100 50 M14 *	19.62	32	M14 x 1.5	--	100	30.5	15.0	43.5	steel	74.9

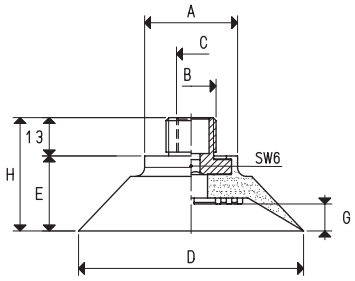

* Complete the code indicating the compound: B= BENZ rubber; N= natural para rubber; S= silicon

CUPS WITH FEMALE VULCANISED SUPPORT

Art.	Force Kg	A Ø	B Ø	D Ø	E	G	H	Support material	Weight g
08 50 40 F *	4.90	31	G3/8"	50	16.0	6.5	32.5	steel	49.5
08 75 40 F *	11.04	31	G3/8"	75	25.0	9.0	41.5	steel	68.3
08 100 40 F *	19.62	32	G3/8"	100	26.0	9.0	42.5	steel	89.3
08 100 50 F *	19.62	32	G3/8"	100	30.5	15.0	47.0	steel	88.8

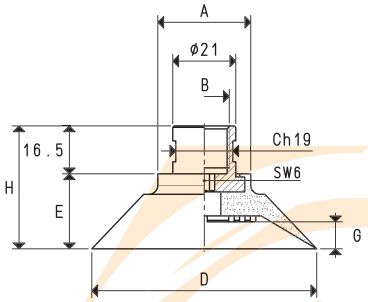

* Complete the code indicating the compound: B= BENZ rubber; N= natural para rubber; S= silicon

Conversion ratio: inch = $\frac{mm}{25.4}$; pounds = $\frac{g}{453.6} = \frac{Kg}{0.4536}$

GAS - NPT thread adapters available at page 1.117

These cups are very similar to those described in the previous page, they differ only for their round lip and their internal cleats.
These features allow them to be used even in the heaviest conditions.
The field of use is the same.
They are also made with BENZ compond and the galvanised steel support is vulcanised onto the cup. These cups are also available in natural para rubber and silicon.

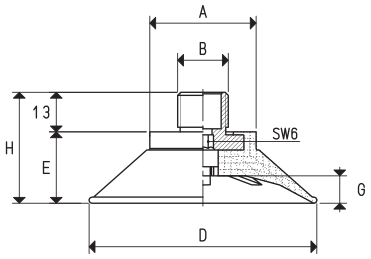

CUPS WITH MALE VULCANISED SUPPORT

Art.	Force Kg	A Ø	B Ø	D Ø	E	G	H	Support material	Weight g
08 50 99 *	4.90	30	G3/8"	50	23.5	9	36.5	steel	43.2
08 75 99 *	11.04	35	G3/8"	75	23.5	9	36.5	steel	59.2
08 100 99 *	19.62	35	G3/8"	100	40.0	12	53.0	steel	113.2
08 50 99 1/4" *	4.90	30	G1/4"	50	23.5	9	36.5	steel	39.4
08 75 99 1/4" *	11.04	35	G1/4"	75	23.5	9	36.5	steel	55.2
08 100 99 1/4" *	19.62	35	G1/4"	100	40.0	12	53.0	steel	109.2

* Complete the code indicating the compound: B= BENZ rubber; N= natural para rubber; S= silicon

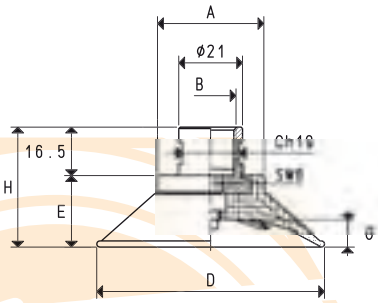

CUPS WITH FEMALE VULCANISED SUPPORT

Art.	Force Kg	A Ø	B Ø	D Ø	E	G	H	Support material	Weight g
08 50 99 F *	4.90	31	G3/8"	50	23.5	9	40.0	steel	55.6
08 75 99 F *	11.04	35	G3/8"	75	23.5	9	40.0	steel	70.5
08 100 99 F *	19.62	35	G3/8"	100	40.0	12	56.5	steel	118.8

* Complete the code indicating the compound: B= BENZ rubber; N= natural para rubber; S= silicon

Conversion ratio: inch = $\frac{mm}{25.4}$; pounds = $\frac{g}{453.6} = \frac{Kg}{0.4536}$

GAS - NPT thread adapters available at page 1.117

These cups have been created as an alternative to the ordinary cups used in the robot-automotive field and they offer an excellent solution to gripping and handling problems that could arise on vacuum-driven handlers in every industry sector.
They can be both flat and bellow-type, round and oval and equipped with support. The extremely flexible outside lip, can be associated with the typical features of the bellow cups, allow them to adapt themselves on flat, concave and convex surfaces with no risk of deforming or breaking even the thinnest objects to be handled.
The innovative design of the inside of the cups, which facilitates the drainage of oil and water, ensures a high friction coefficient with the gripping surface and, in particular, a unique grip on oil-covered metal sheets or wet glass or marble sheets. This particular feature guarantees a firm grip and, therefore, an accurate placemet of the load to be handled.
The MAXIGRIP standard cups are made with our exclusive BENZ compound:
- Hardness 60÷75°Sh.;
- Working temperature between -40 and +170 °C;
- Stain-resistant;
- Excellent resistance to abrasion, water and to oils containing chlorine.
Their galvanised steel support is vulcanised onto the cup.
A wide range of accessories, such as adapters, couplers and articulated joints, allows them to be installed on any vacuum-driven handler.
Because of their universality of use, these cups can also be provided in the special compounds listed at page 21.

CIRCULAR FLat AND BELLOW cups

CUPS WITH VULCANISED SUPPORT

Art.	Force	A	°B	Ch	D	d	E	F	G	H	I	SW	Support	Weight
	Kg	Ø	Ø		Ø	Ø							material	g
VRP 40 *	3.14	26	G1/4"	15	40	17	16	14	4.0	31	15	6	steel	33.6
VRP 50 *	4.90	30	G3/8"	19	50	21	18	14	5.0	33	15	6	steel	49.3
VRP 60 *	7.06	30	G3/8"	19	60	21	21	14	6.0	36	15	6	steel	55.3
VRP 80 *	12.56	35	G3/8"	19	80	21	25	14	7.5	40	15	6	steel	74.9
VRP 100 *	19.62	35	G3/8"	19	100	21	25	14	9.5	40	15	6	steel	80.7
VRP 125 *	30.66	35	G3/8"	19	125	21	33	14	12.5	48	15	6	steel	139.6

* Complete the code indicating the compound: B= BENZ rubber; N= natural para rubber; S= silicon

° Available with NPT thread. Order example: VRP 80 NPT B

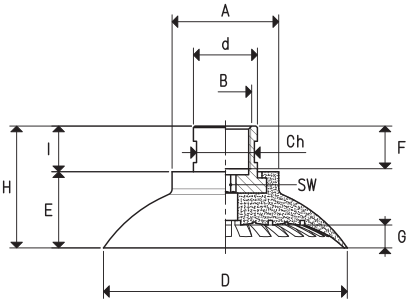

BELLOW CUP WITH VULCANISED SUPPORT

Art.	Force	A	B	°C	Ch	D	d	E	F	G	H	I	M	Support	Weight
	Kg	Ø	Ø	Ø		Ø	Ø						Ø	material	g
VRS 40 *	3.14	43	30	G1/4"	17	40	24	21.0	10	7.0	35.0	14	G1/8"	steel	56.3
VRS 50 *	4.90	53	40	G3/8"	22	50	34	21.0	10	7.0	36.0	15	G1/4"	steel	77.6
VRS 60 *	7.06	63	50	G3/8"	22	60	44	21.0	10	7.0	36.0	15	G1/4"	steel	107.9
VRS 80 *	12.56	83	70	G3/8"	22	80	64	23.0	10	9.0	38.0	15	G1/4"	steel	205.9
VRS 100 *	19.62	103	80	G3/8"	22	100	79	29.0	10	13.0	44.0	15	G1/4"	steel	269.0
VRS 125 *	30.66	128	105	G3/8"	22	125	100	32.5	10	16.5	47.5	15	G1/4"	steel	464.2

* Complete the code indicating the compound: B= BENZ rubber; N= natural para rubber; S= silicon

° Available with NPT thread. Order example: VRS 80 NPT B

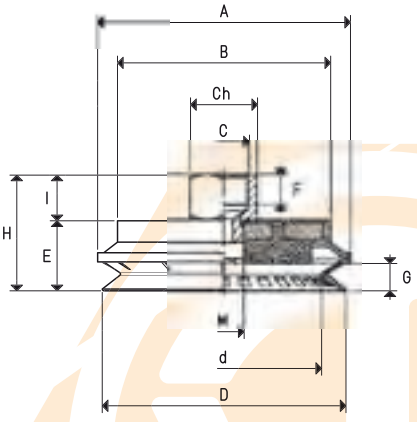

Conversion ratio: inch = $\frac{mm}{25.4}$; pounds = $\frac{g}{453.6}$ = $\frac{Kg}{0.4536}$

GAS - NPT thread adapters available at page 1.117

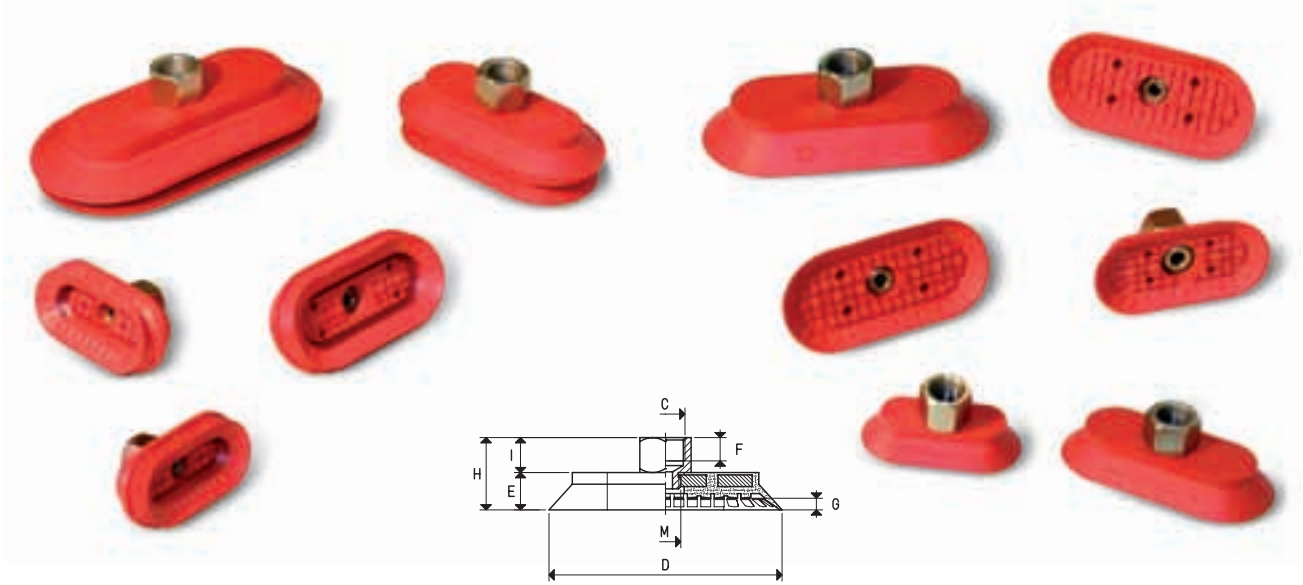

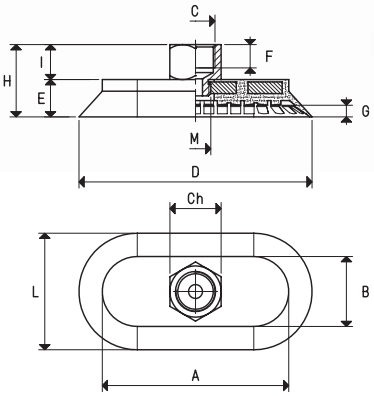

OVAL CUPS WITH VULCANISED SUPPORT

Art.	Force Kg	A	B	°C Ø	Ch	D	E	F	G	H	I	L	M Ø	Support Material	Weight g
VEP 30 60 *	4.01	47	17	G1/4"	17	60	13	10	3	27	14	30	G1/8"	steel	42.6
VEP 30 90 *	6.26	77	17	G1/4"	17	90	13	10	3	27	14	30	G1/8"	steel	63.5
VEP 40 80 *	7.14	70	30	G1/4"	17	80	14	10	4	28	14	40	G1/8"	steel	68.0
VEP 50 100 *	11.15	80	30	G3/8"	22	100	16	10	5	31	15	50	G1/4"	steel	110.0
VEP 60 120 *	16.06	95	35	G3/8"	22	120	18	10	6	33	15	60	G1/4"	steel	156.1
VEP 70 140 *	21.86	110	40	G3/8"	22	140	19	10	7	34	15	70	G1/4"	steel	199.4

* Complete the code indicating the compound: B= BENZ rubber; N= natural para rubber; S= silicon

° Available with NPT thread. Order example: VEP 40 80 NPT B

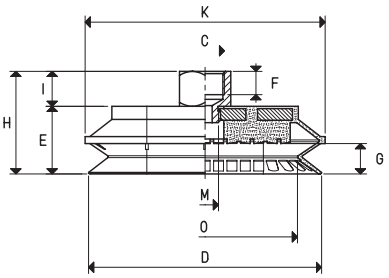

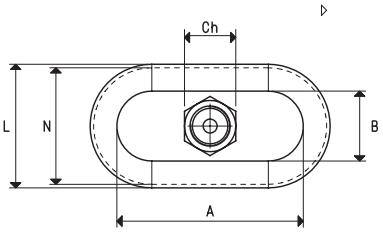

OVAL BELLOW CUPS WITH VULCANISED SUPPORT

Art.	Force Kg	A	B	°C Ø	Ch	D	E	F	G	H	K	I	L	M Ø	N	O	Support material	Weight g
VES 30 60 *	4.01	50	20	G1/4"	17	60	21	10	7.0	35	63	14	33	G1/8"	30	44.5	steel	49.5
VES 40 80 *	7.14	70	30	G1/4"	17	80	23	10	9.0	37	83	14	43	G1/8"	40	64.0	steel	91.9
VES 50 100 *	11.15	80	30	G3/8"	22	100	29	10	13.0	44	103	15	53	G1/4"	50	79.0	steel	125.3
VES 70 140 *	21.86	110	40	G3/8"	22	140	33	10	16.5	48	143	15	73	G1/4"	70	109.0	steel	227.8

* Complete the code indicating the compound: B= BENZ rubber; N= natural para rubber; S= silicon

° Available with NPT thread. Order example: VES 40 80 NPT B

Conversion ratio: inch $\frac{mm}{25.4}$; pounds = $\frac{g}{453.6} = \frac{Kg}{0.4536}$

GAS-NPT thread adapters available at page 1.117

These standard accessories provide various MAXIGRIP CUP assembly options.
The galvanised steel adapters transform the female standard support thread connections into male and the gas ones into metric. The internal hexagonal housing allows for an easy screwing on the supports.

MF REDUCTIONS FOR VRP CUPS

Art.	D Ø	d Ø	F	H	SW	Weight g
00 08 215	G3/8"	G1/4"	8	14	6	11.5

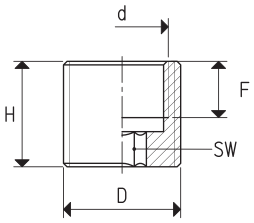

MF REDUCTIONS FOR VRS - VEP - VES CUPS

Art.	D Ø	d Ø	F	H	SW	Weight g
00 08 216	G3/8"	G1/4"	8	11.5	6	6.0

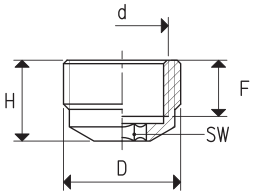

MM REDUCTIONS FOR VRP CUPS

Art.	D Ø	d Ø	E	F	SW	Weight g
00 08 217	G1/4"	G1/4"	15	10	6	16.7
00 08 218	G1/4"	M10 x 1.5	15	12	6	10.2
00 08 219	G1/4"	M14 x 1.5	15	12	6	16.0
00 08 220	G3/8"	G1/4"	14	10	6	18.4
00 08 221	G3/8"	M10 x 1.5	14	12	6	16.3
00 08 222	G3/8"	M14 x 1.5	14	12	6	22.5

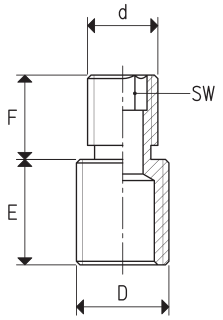

MM REDUCTIONS FOR VRS - VEP - VES CUPS

Art.	D Ø	d Ø	E	F	SW	Weight g
00 08 223	G1/4"	G1/4"	11.5	10	6	13.9
00 08 224	G1/4"	M10 x 1.5	13.0	12	6	10.1
00 08 225	G1/4"	M14 x 1.5	13.0	12	6	15.8
00 08 226	G3/8"	G1/4"	10.5	11	6	16.6
00 08 227	G3/8"	M10 x 1.5	10.5	13	6	14.2
00 08 228	G3/8"	M14 x 1.5	10.5	13	6	20.2

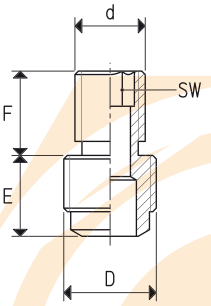

Conversion ratio: inch = $\frac{mm}{25.4}$; pounds = $\frac{g}{453.6} = \frac{Kg}{0.4536}$

GAS-NPT thread adapters available at page 1.117

In this page are described accessories for MAXIGRIP CUPS.
The galvanised steel MF reduction is suited for all cups with female 1/4" gas thread connection and allows increasing it to 3/8" gas, always female.
The AQ adapters with square, flange and male and female thread connections are made with anodised aluminium and are suited for robotic gripping systems. They allow quick installation of the cups on the profiles used in the automotive sector.
The built-in seal guarantees perfect vacuum seal.

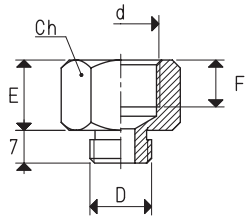

MF REDUCTIONS FOR VRP-VRS-VEP-VES CUPS

Art.	E	F	D Ø	d Ø	Ch	Reduction material	Weight g
00 08 208	15	9	G1/4"	G3/8"	22	steel	31

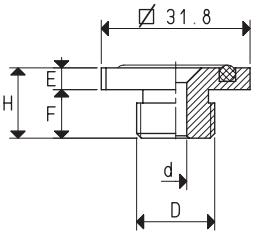

SQUARE REDUCTION FOR VRP-VRS-VEP-VES CUPS

Art.	H	E	F	D Ø	d Ø	Material	Weight g	Spare O-ring art.
AQ 32 1/8"	13	4.6	8.4	G1/8"	5	aluminium	11.8	00 08 214
AQ 32 1/4"	13	4.6	8.4	G1/4"	5	aluminium	13.2	00 08 214
AQ 32 3/8"	13	4.6	8.4	G3/8"	5	aluminium	15.6	00 08 214
AQ 32 1/2"	13	4.6	8.4	G3/8"	5	aluminium	17.2	00 08 214

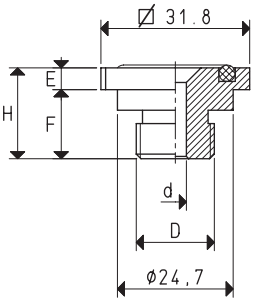

SQUARE REDUCTION FOR VRP-VRS-VEP-VES CUPS

Art.	H	E	F	D Ø	d Ø	Material	Weight g	Spare O-ring art.
AQS 32 1/8"	16.1	4.6	11.5	G1/8"	5	aluminium	12.2	00 08 214
AQS 32 1/4"	20.0	4.6	15.4	G1/4"	5	aluminium	13.6	00 08 214
AQS 32 3/8"	20.0	4.6	15.4	G3/8"	5	aluminium	16.2	00 08 214
AQS 32 1/2"	20.0	4.6	15.4	G1/2"	5	aluminium	17.8	00 08 214

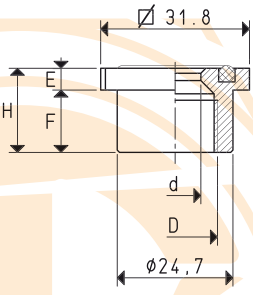

SQUARE REDUCTION FOR VRP-VRS-VEP-VES CUPS

Art.	H	E	F	D Ø	d Ø	Material	Weight g	Spare O-ring art.
AQ 32 1/4" F	17.9	4.6	13.3	G1/4"	11	aluminium	15.2	00 08 214
AQ 32 3/8" F	17.9	4.6	13.3	G3/8"	11	aluminium	14.1	00 08 214

Conversion ratio: inch = $\frac{mm}{25.4}$; pounds = $\frac{g}{453.6}$ = $\frac{Kg}{0.4536}$

GAS - NPT thread adapters available at page 1.117

These articulated joints made with anodised aluminium allow rotating the cup they are installed on by 360° and tilt them up to 35°, in order to adapt it and lock it correctly into position, guaranteeing, at the same time, air flow through the joint and a perfect seal.

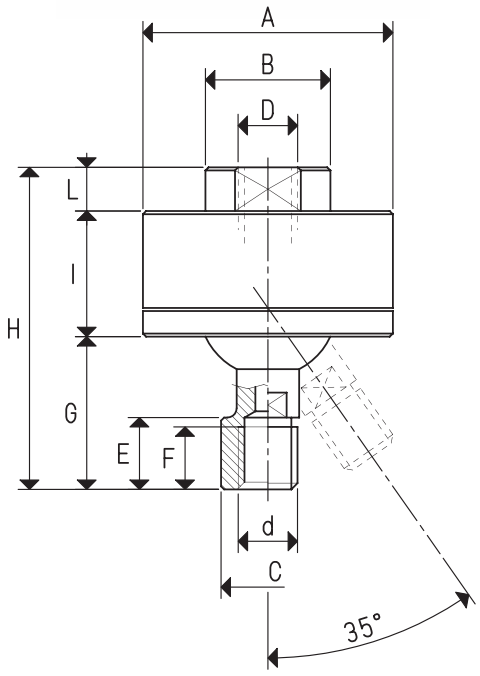

ARTICULATED JOINTS

Art.	A Ø	B Ø	C Ø	D Ø	d Ø	E	F	G	H	I	L	Max load allowed Kg	Material	Weight g
GSV 1/8"	40	20	--	G1/8"	G1/8"	11.5	10	24.5	51.5	20	7	18.24	aluminium	77.6
GSV 1/4"	45	25	--	G1/4"	G1/4"	14.5	12	28.5	60.5	25	7	23.54	aluminium	126.7
GSV 3/8"	50	30	--	G3/8"	G3/8"	14.0	12	34.5	69.5	25	10	33.91	aluminium	171.2
GSVF 1/8"	40	20	15	G1/8"	G1/8"	11.5	10	24.5	51.5	20	7	18.24	aluminium	80.4
GSVF 1/4"	45	25	20	G1/4"	G1/4"	14.5	12	28.5	60.5	25	7	23.54	aluminium	129.2
GSVF 3/8"	50	30	21	G3/8"	G3/8"	17.0	12	34.5	69.5	25	10	33.91	aluminium	167.6

Conversion ratio: inch = $\frac{mm}{25.4}$; pounds = $\frac{g}{453.6}$ = $\frac{Kg}{0.4536}$

GAS - NPT thread adapters available at page 1.117

The cups described in this page have been designed to solve most of the gripping problems that can arise handling wooden or plastic panels, thin glass or marble sheets, fragile metal sheets, ceramic or baked clay tiles, etc.
Their low, stong and slightly tilted lip does not swipe on the loading surface during the gripping phase.
The cleats on the inside of these cups, along with reducing the volume of air to be sucked, create a perfect supporting surface which prevents any gripping surface deformation as well as the vertically lifted load from slipping. These cups can be cold-assembled, with no adhesives, onto their anodised aluminium support and locked by the ring nut.
These cups are extremely easy to replace; for the spare part, in fact, all you have to do is request the cup indicated in the table in the desired compound.

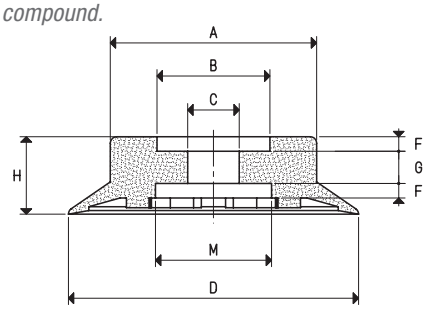

CUPS

Art.	Force Kg	A Ø	B Ø	C Ø	D Ø	F	G	H	M Ø
01 76 24 *	11.33	54	35	16	76	4.5	10	24	36
01 90 24 *	15.89	64	35	16	90	4.5	10	24	36
01 110 24 *	23.74	79	35	16	110	4.5	10	24	36
01 150 36 *	45.00	98	70	16	150	6.0	17	36	70

* Complete the code indicating the compound: A= oil-resistant rubber; N= natural para rubber; S= silicon

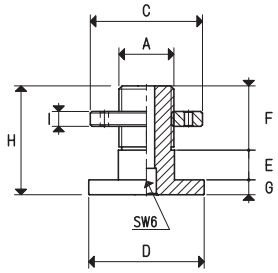

SUPPORTS

Art.	A Ø	C Ø	D Ø	E	F	G	H	I	Support/ring nut material	Cup art.	Weight g
00 08 108	G1/4"	34	35	9	19.5	4.5	33.0	4.5	aluminium	01 76 24 01 90 24 01 110 24	31.2
00 08 110	G3/8"	34	35	9	19.5	4.5	33.0	4.5	aluminium	01 76 24 01 90 24 01 110 24	33.7
00 08 112	G3/8"	69	69	15	22.0	5.5	42.5	6.0	aluminium	01 150 36	132.1

Note: By ordering the support, the ring nut will be automatically provided

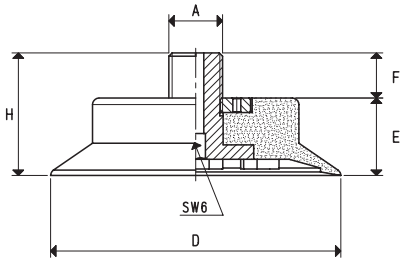

CUPS WITH SUPPORT

Art.	Force Kg	A Ø	D Ø	E	F	H	Cup Art.	Support Art.	Weight g
08 76 24 1/4" *	11.33	G1/4"	76	24	14	38	01 76 24	00 08 108	83.1
08 90 24 1/4" *	15.89	G1/4"	90	24	14	38	01 90 24	00 08 108	112.0
08 110 24 1/4" *	23.74	G1/4"	110	24	14	38	01 110 24	00 08 108	168.2
08 76 24 3/8" *	11.33	G3/8"	76	24	14	38	01 76 24	00 08 110	85.6
08 90 24 3/8" *	15.89	G3/8"	90	24	14	38	01 90 24	00 08 110	114.5
08 110 24 3/8" *	23.74	G3/8"	110	24	14	38	01 110 24	00 08 110	170.7
08 150 36 *	45.00	G3/8"	150	36	14	50	01 150 36	00 08 112	436.5

* Complete the code indicating the compound: A= oil-resistant rubber; N= natural para rubber; S= silicon

Conversion ratio: inch = $\frac{mm}{25.4}$; pounds = $\frac{g}{453.6}$ = $\frac{Kg}{0.4536}$

GAS - NPT thread adapters available at page 1.117

The cups described in this page has been designed for gripping soft drink cans. They can obviously be also used for gripping other objects with flat smooth or slightly rough surfaces. The shape of its lip allows a firm grip of the load to be handled, eliminating any oscillation and reducing the air volume contained within, thus allowing a quicker grip and release. These cups can be cold-assembled, with no adhesives, onto their anodised aluminium support equipped with a threaded hole in the centre to allow their fastening to the machine. These cups are extremely easy to replace; for the spare part, in fact, all you have to do is request the cup indicated in the table in the desired compound.

CUP

Art.	Force	A	B	C	D	F	H
	Kg	Ø	Ø	Ø	Ø		
01 56 15 *	6.15	56	48	44	56	11	15

* Complete the code indicating the compound: A= oil-resistant rubber; N= natural para rubber; S= silicon

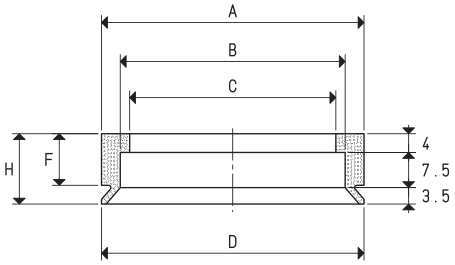

SUPPORT

Art.	A	B	C	D	F	H	Support material	Cup art.	Weight
	Ø	Ø	Ø	Ø					g
00 08 83	48.5	M12	5	48.5	11	14.5	aluminium	01 56 15	67.4

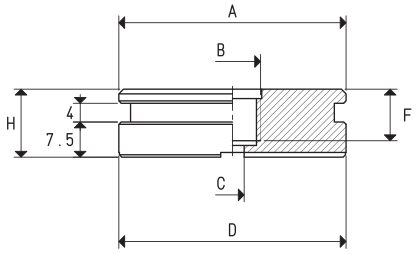

CUPS WITH SUPPORT

Art.	Force	A	B	C	D	F	H	Cup Art.	Support. Art.	Weight
	Kg	Ø	Ø	Ø	Ø					g
08 56 15 *	6.15	48.5	M12	5	56	11	18	01 56 15	00 08 83	78

* Complete the code indicating the compound: A= oil-resistant rubber; N= natural para rubber; S= silicon

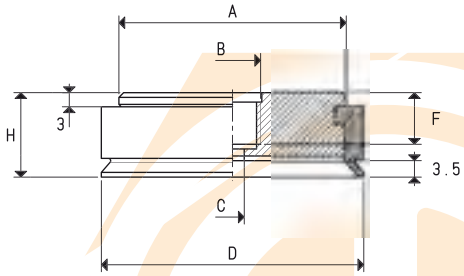

Conversion ratio: inch = $\frac{mm}{25.4}$; pounds = $\frac{g}{453.6} = \frac{Kg}{0.4536}$

FLAT CIRCULAR CUPS WITH SUPPORT

These cups feature a particularly thin and soft lip, which allows it to grip very rough surfaces. Its supporting surface with cleats guarantees a firm grip on the load to be handled. These cups have been specially designed for gripping ceramic tiles with smooth, rough and non-slip surfaces, although, due to their features, they can also be used for handling glass, marble and cement manufactures. These cups can be cold-assembled, with no adhesives, onto their anodised aluminium support equipped with a threaded hole in the centre to allow their fastening to the machine. These cups are extremely easy to replace; for the spare part, in fact, all you have to do is request the cup indicated in the table in the desired compound

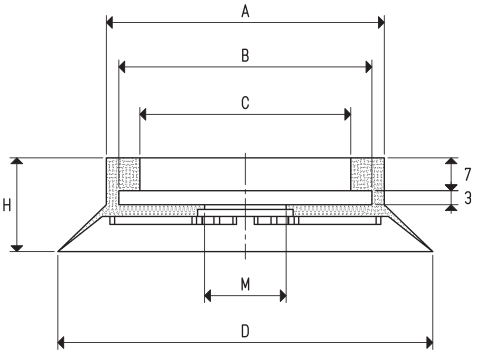

CUPS

Art.	Force	A	B	C	D	H	M
	Kg	Ø	Ø	Ø	Ø		Ø
01 80 20 *	12.56	58	54	45	80	20	17

* Complete the code indicating the compound: A= oil-resistant rubber; N= natural para rubber; S= silicon

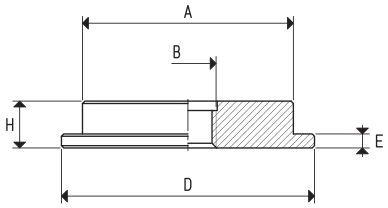

SUPPORTS

Art.	A	B	D	E	H	Support material	Cup art.	Weight
	Ø	Ø	Ø					g
00 08 126	45	M12	54	3	10	aluminium	01 80 20	45.5
00 08 143	45	G1/2"	54	3	10	aluminium	01 80 20	41.5

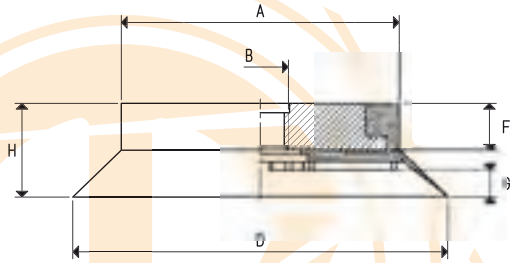

CUPS WITH SUPPORTS

Art.	Force	A	B	D	F	G	H	Cup Art.	Support Art.	Weight
	Kg	Ø	Ø	Ø						g
08 80 20 *	12.56	58	M12	80	10	6	20	01 80 20	00 08 126	70.7
08 80 20 1/2" *	12.56	58	G1/2"	80	10	6	20	01 80 20	00 08 143	66.7

* Complete the code indicating the compound: A= oil-resistant rubber; N= natural para rubber; S= silicon

Conversion ratio: inch = $\frac{mm}{25.4}$; pounds = $\frac{g}{453.6} = \frac{Kg}{0.4536}$

GAS - NPT thread adapters available at page 1.117

These cups have been designed, in particular, for handling metal sheets, glass, wooden panels, marble granite and other similar materials.
The shape of its lip allows a firm grip of the load to be handled, eliminating any oscillation and reducing the air volume contained within, thus allowing a quicker grip and release.
These cups are provided with cleats which, besides avoiding the load to bend in correspondence of the gripping point, also have the purpose to increase the friction surface with the vertically lifted load, preventing it from slipping.
They are normally available in the three standard compounds, but can be supplied in special compounds and in a minimum amount to be defined in the order, upon request.
These cups can be cold-assembled, with no adhesives, on their anodised aluminium support equipped with a threaded hole in the centre to allow its fastening to the machine and, upon request, it can be supplied with a side hole with gas thread for the suction fitting.
These cups are extremely easy to replace; for the spare part, in fact, all you have to do is request the cup indicated in the table in the desired compound.

CUPS

Art.	Force	A	B	C	D	E	F	H	M	N	O
	Kg	Ø	Ø	Ø	Ø					Ø	Ø
01 65 15 *	8.29	68	63	59	65	3	7	17	--	27	--
01 65 16 *	8.29	68	63	59	65	3	7	17	21	27	4.5

* Complete the code indicating the compound: A= oil-resistant rubber; N= natural para rubber; S= silicon

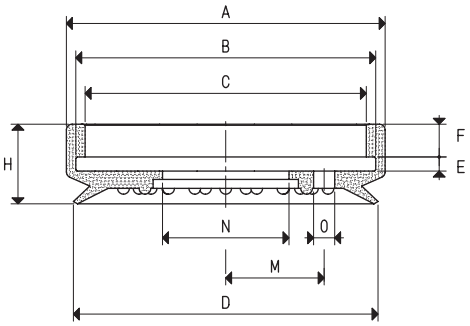

SUPPORTS

Art.	A	B	C	D	E	H	M	Cup	Support	Weight
	Ø	Ø	Ø	Ø				art.	material	g
00 08 32	60	M12	--	64	3	10	--	01 65 15	aluminium	80.6
00 02 36	60	M8	G1/4"	64	3	10	21	01 65 16	aluminium	78.1
00 06 13	60	M12	G1/4"	64	3	10	21	01 65 16	aluminium	77.1

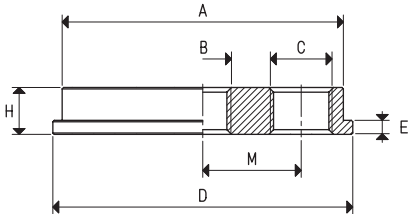

CUPS WITH SUPPORTS

Art.	Force	A	B	C	D	F	H	M	O	Cup	Support	Weight
	Kg	Ø	Ø	Ø	Ø				Ø	Art.	Art.	g
08 65 15 *	8.29	69	M12	--	65	10	17	--	--	01 65 15	00 08 32	102.0
08 65 16 *	8.29	69	M8	G1/4"	65	10	17	21	4.5	01 65 16	00 02 36	100.0
08 65 17 *	8.29	69	M12	G1/4"	65	10	17	21	4.5	01 65 16	00 06 13	98.5

* Complete the code indicating the compound: A= oil-resistant rubber; N= natural para rubber; S= silicon

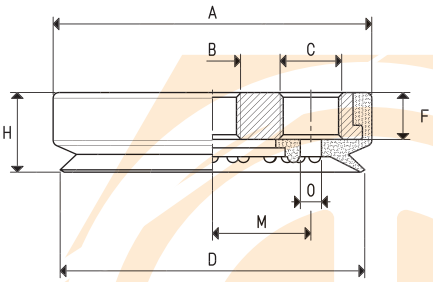

Conversion ratio: inch = $\frac{mm}{25.4}$; pounds = $\frac{g}{453.6} = \frac{Kg}{0.4536}$

GAS - NPT thread adapters available at page 1.117

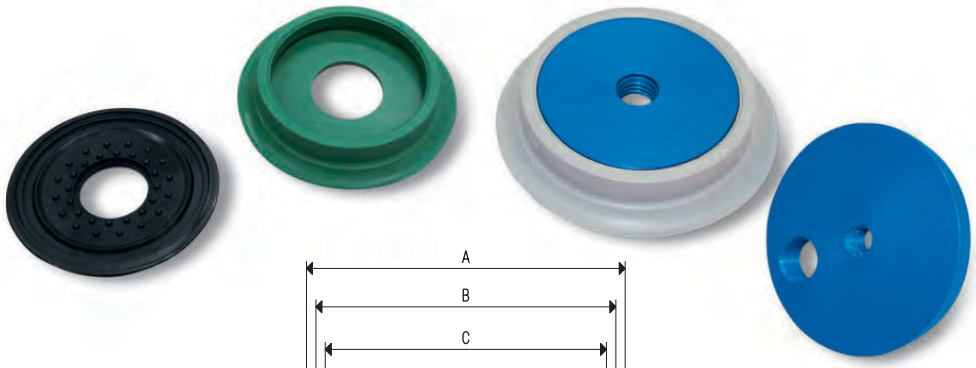

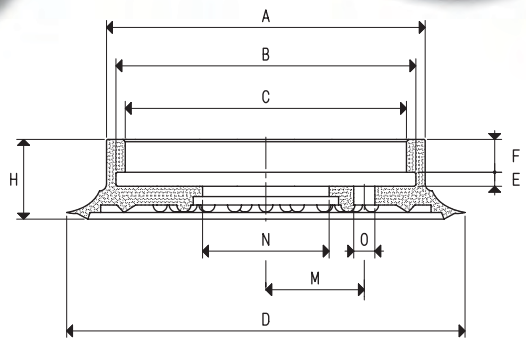

CUPS

Art.	Force	A	B	C	D	E	F	H	M	N	O
	Kg	Ø	Ø	Ø	Ø					Ø	Ø
01 85 15 *	14.18	68	63	59	85	3	7	17	--	27	--
01 85 16 *	14.18	68	63	59	85	3	7	17	21	27	4.5

* Complete the code indicating the compound: A= oil-resistant rubber; N= natural para rubber; S= silicon

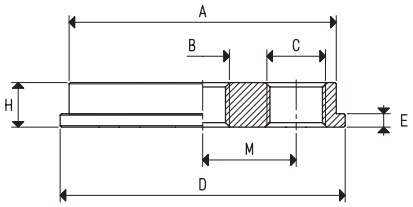

SUPPORTS

Art.	A	B	C	D	E	H	M	Cup	Support	Weight
	Ø	Ø	Ø	Ø				art.	material	g
00 08 32	60	M12	--	64	3	10	--	01 85 15	aluminium	80.6
00 08 234	60	G1/2"	--	64	3	10	--	01 85 15	aluminium	78.3
00 08 233	60	G3/4"	--	64	3	10	--	01 85 15	aluminium	77.3
00 02 36	60	M8	G1/4"	64	3	10	21	01 85 16	aluminium	78.1
00 06 13	60	M12	G1/4"	64	3	10	21	01 85 16	aluminium	77.1

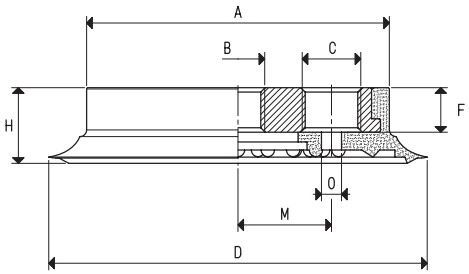

CUPS WITH SUPPORT

Art.	Force	A	B	C	D	F	H	M	O	Cup	Support	Weight
	Kg	Ø	Ø	Ø	Ø				Ø	Art.	Art.	g
08 85 15 *	**14.18**	69	M12	--	85	10	17	--	--	01 85 15	00 08 32	110.3
08 85 15 1/2" *	**14.18**	69	G1/2"	--	85	10	17	--	--	01 85 15	00 08 234	108.0
08 85 15 3/4" *	**14.18**	69	G3/4"	--	85	10	17	--	--	01 85 15	00 08 233	107.0
08 85 16 *	**14.18**	69	M8	G1/4"	85	10	17	21	4.5	01 85 16	00 02 36	107.7
08 85 17 *	**14.18**	69	M12	G1/4"	85	10	17	21	4.5	01 85 16	00 06 13	106.7

* Complete the code indicating the compound: A= oil-resistant rubber; N= natural para rubber; S= silicon

Conversion ratio: inch = $\frac{mm}{25.4}$; pounds = $\frac{g}{453.6} = \frac{Kg}{0.4536}$

GAS - NPT thread adapters available at page 1.117

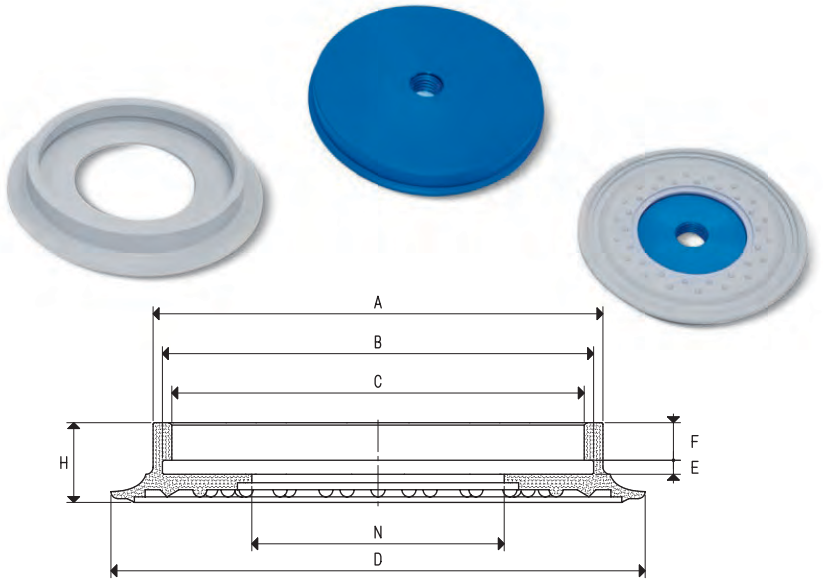

CUPS

Art.	Force Kg	A Ø	B Ø	C Ø	D Ø	E	F	H	N Ø
01 110 10 *	23.74	96	91	87	114	3	8	17	54

* Complete the code indicating the compound: A= oil-resistant rubber; N= natural para rubber; S= silicon

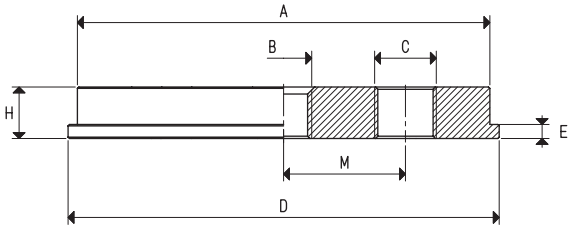

SUPPORTS

Art.	A Ø	B Ø	C Ø	D Ø	E	H	M	Cup art.	Support material	Weight g
00 08 33	88	M12	--	92	3	11	--	01 110 10	aluminium	188.9
00 02 37	88	M8	G1/4"	92	3	11	26	01 110 10	aluminium	188.8
00 06 14	88	M12	G1/4"	92	3	11	26	01 110 10	aluminium	185.8
00 08 123	88	G3/8"	--	92	3	11	--	01 110 10	aluminium	186.1

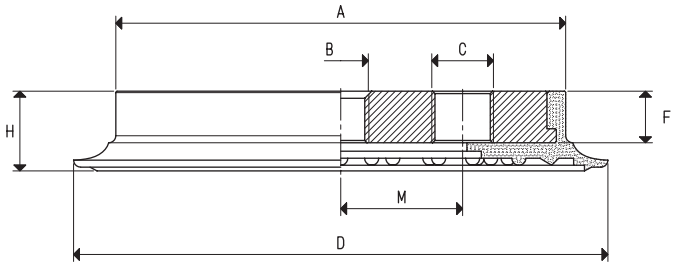

CUPS WITH SUPPORT

Art.	Force Kg	A Ø	B Ø	C Ø	D Ø	F	H	M	Cup Art.	Support Art.	Weight g
08 110 10 *	23.74	97	M12	--	114	11	17	--	01 110 10	00 08 33	233.2
08 110 11 *	23.74	97	M8	G1/4"	114	11	17	26	01 110 10	00 02 37	233.1
08 110 12 *	23.74	97	M12	G1/4"	114	11	17	26	01 110 10	00 06 14	230.1
08 110 13 *	23.74	97	G3/8"	--	114	11	17	--	01 110 10	00 08 123	230.4

* Complete the code indicating the compound: A= oil-resistant rubber; N= natural para rubber; S= silicon

Conversion ratio: inch = $\frac{mm}{25.4}$; pounds = $\frac{g}{453.6} = \frac{Kg}{0.4536}$

GAS - NPT thread adapters available at page 1.117

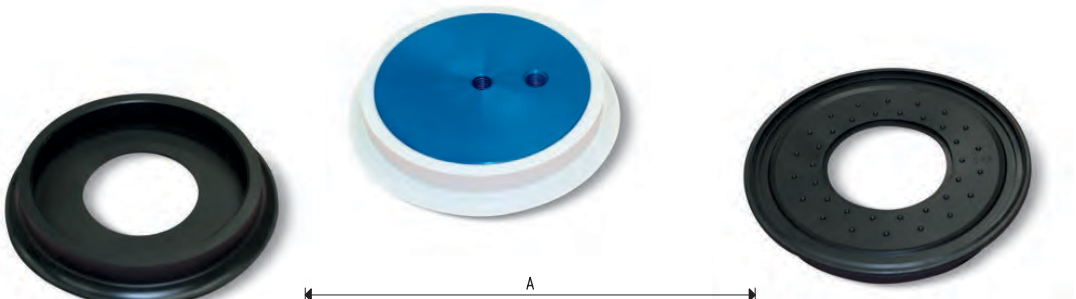

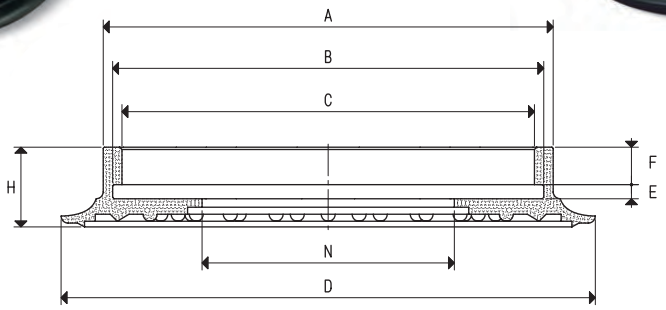

CUPS

Art.	Force Kg	A Ø	B Ø	C Ø	D Ø	E	F	H	N Ø
01 150 10 *	45.00	133	125	118	154	4	11	23	64

* Complete the code indicating the compound: A= oil-resistant rubber; N= natural para rubber; S= silicon

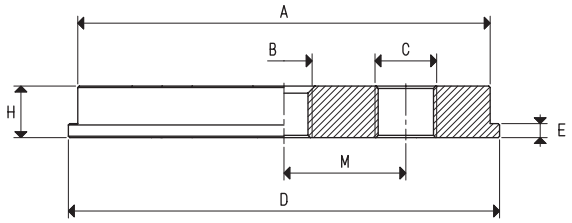

SUPPORTS

Art.	A Ø	B Ø	C Ø	D Ø	E	H	M	Cup art.	Support material	Weight g
00 08 35	120	M12	--	127	4	15	--	01 150 10	aluminium	471.3
00 08 107	120	M12	G3/8"	127	4	15	30	01 150 10	aluminium	476.9
00 08 119	120	G3/8"	--	127	4	15	--	01 150 10	aluminium	478.9
00 08 145	120	G3/8"	G3/8"	127	4	15	27	01 150 10	aluminium	471.9
00 06 15	120	M12	G1/4"	127	4	15	30	01 150 10	aluminium	476.3

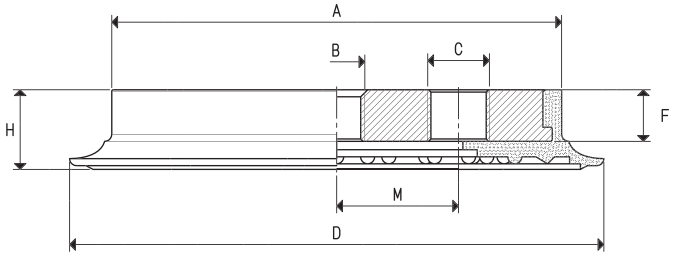

CUPS WITH SUPPORT

Art.	Force Kg	A Ø	B Ø	C Ø	D Ø	F	H	M	Cup Art.	Support Art.	Weight g
08 150 10 *	45.00	135	M12	--	154	15	23	--	01 150 10	00 08 35	583.3
08 150 12 *	45.00	135	M12	G3/8"	154	15	23	30	01 150 10	00 08 107	588.9
08 150 13 *	45.00	135	G3/8"	--	154	15	23	--	01 150 10	00 08 119	590.9
08 150 14 *	45.00	135	G3/8"	G3/8"	154	15	23	27	01 150 10	00 08 145	583.9
08 150 16 *	45.00	135	M12	G1/4"	154	15	23	30	01 150 10	00 06 15	588.3

* Complete the code indicating the compound: A= oil-resistant rubber; N= natural para rubber; S= silicon

Conversion ratio: inch = $\frac{mm}{25.4}$; pounds = $\frac{g}{453.6} = \frac{Kg}{0.4536}$

GAS - NPT thread adapters available at page 1.117

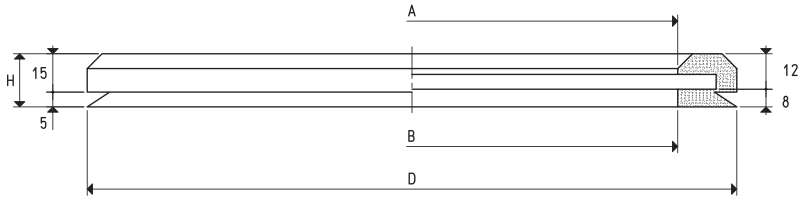

CUPS

Art.	Force	A	B	D	H	Compound
	Kg	Ø	Ø	Ø		
01 220 10 A	78.5	180	180	220	20	oil-resistant rubber

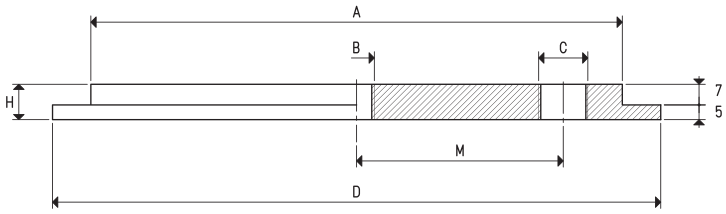

SUPPORTS

Art.	A	B	C	D	H	M	Support material	Cup art.	Weight
	Ø	Ø	Ø	Ø					Kg
00 08 37	180	M12	G3/8"	206	12	70	aluminium	01 220 10 A	0.95

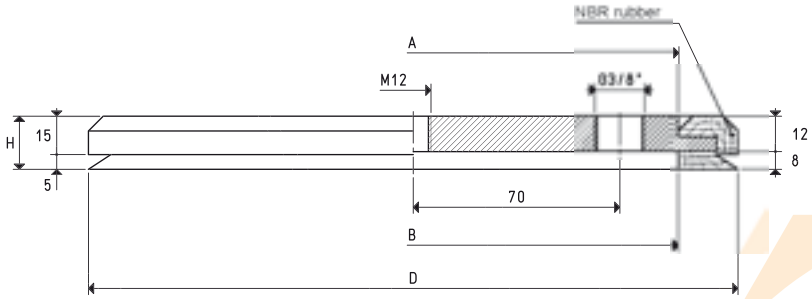

CUPS WITH SUPPORT

Art.	Force	A	B	D	H	Cup Art.	Support Art.	Weight
	Kg	Ø	Ø	Ø				Kg
08 220 10 A	78.5	180	180	220	20	00 08 37	01 220 10 A	1.12

Conversion ratio: inch = $\frac{mm}{25.4}$; pounds = $\frac{g}{453.6}$ = $\frac{Kg}{0.4536}$

GAS - NPT thread adapters available at page 1.117

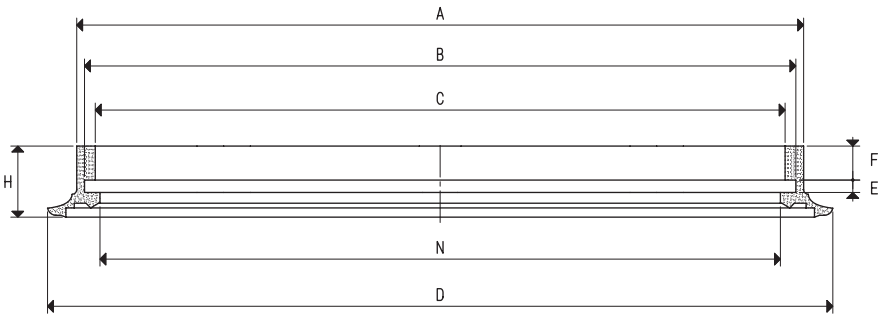

CUPS

Art.	Force	A	B	C	D	E	F	H	N
	Kg	Ø	Ø	Ø	Ø				Ø
01 250 20 *	122.60	235	227	220	254	4	11	23	220

* Complete the code indicating the compound: A= oil-resistant rubber; N= natural para rubber; S= silicon

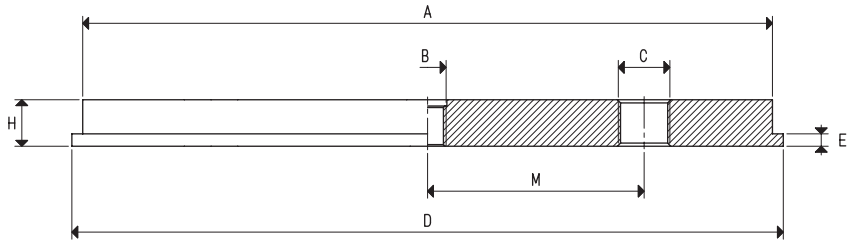

SUPPORTS

Art.	A	B	C	D	E	H	M	Cup	Support	Weight
	Ø	Ø	Ø	Ø				art.	material	Kg
00 08 115	223	M12	G3/8"	230	4	15	70	01 250 20	aluminium	1.65

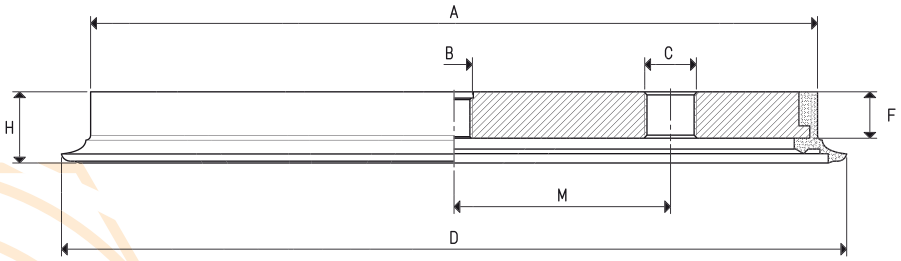

CUPS WITH SUPPORT

Art.	Force	A	B	C	D	F	H	M	Cup	Support	Weight
	Kg	Ø	Ø	Ø	Ø				Art.	Art.	Kg
08 250 20 *	122.60	237	M12	G3/8"	254	15	23	70	01 250 20	00 08 115	1.78

* Complete the code indicating the compound: A= oil-resistant rubber; N= natural para rubber; S= silicon

Conversion ratio: inch = $\frac{mm}{25.4}$; pounds = $\frac{g}{453.6} = \frac{Kg}{0.4536}$

GAS - NPT thread adapters available at page 1.117

These foam rubber cups are made with a special compound called GERANIUM, with a density that allows them to grip even uneven and very rough surfaces maintaining their elasticity also after many working cycles. They are provided with self-adhesive side for a quick fixing to their support. This series of cups has been designed for handling loads with raw or very rough surfaces (sawn, bushammered or flamed marble, textured, non-slip or profiled metal sheets, striped plexiglas, raw cement manufactures, garden tiles with fret, etc.) and in all those cases in which traditional cups cannot be used.

In case of lubricated gripping surfaces, we recommend using NF neoprene foam rubber. The working temperature range is between -40 °C and +80 °C for OF GERANIUM foam rubber and between -20 °C and +80 °C for NF neoprene.

Their supports are made with anodised aluminium and are provided with a threaded hole in the centre for fastening them to the machine. The larger ones, on the other hand, have a side threaded hole for vacuum connection.

For the spare part, all you have to do is request the self-adhesive foam rubber cup indicated in the table, in the required compound.

CUPS

Art.	Force Kg	D Ø	d Ø	E
01 42 15 *	0.78	40	20	15
01 64 15 *	3.5	64	40	15
01 92 15 *	8.5	92	64	15

* Complete the code indicating the compound: OF= geranium foam rubber; NF= neoprene foam rubber

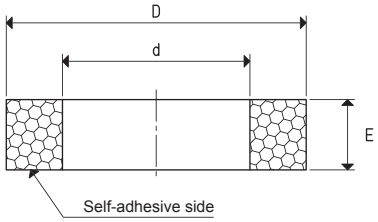

SUPPORTS

Art.	A Ø	B Ø	D Ø	F	H	Support material	Cup art.	Weight g
00 08 147	40	M12	40	--	10	aluminium	01 42 15	32.8
00 08 32	60	M12	64	3	10	aluminium	01 64 15	80.6
00 08 33	88	M12	92	3	11	aluminium	01 92 15	188.9
00 08 123	88	G3/8"	92	3	11	aluminium	01 92 15	186.1

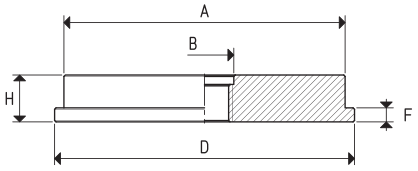

CUPS WITH SUPPORT

Art.	Force Kg	A Ø	B Ø	D Ø	d Ø	E	F	Cup Art.	Support Art.	Weight g
08 42 15 *	0.78	40	M12	40	20	15	10	01 42 15	00 08 147	35.6
08 64 15 *	3.5	60	M12	64	40	15	10	01 64 15	00 08 32	86.5
08 92 15 *	8.5	88	M12	92	64	15	11	01 92 15	00 08 33	199.1
08 92 15 3/8" *	8.5	88	G3/8"	92	64	15	11	01 92 15	00 08 123	196.3

* Complete the code indicating the compound: OF= geranium foam rubber; NF= neoprene foam rubber

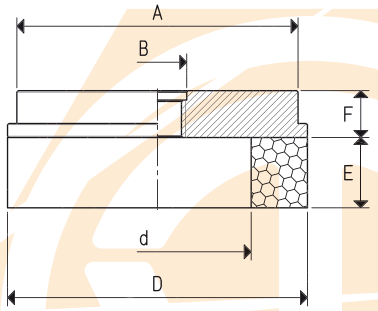

Conversion ratio: inch = $\frac{mm}{25.4}$; pounds = $\frac{g}{453.6} = \frac{Kg}{0.4536}$

GAS - NPT thread adapters available at page 1.117

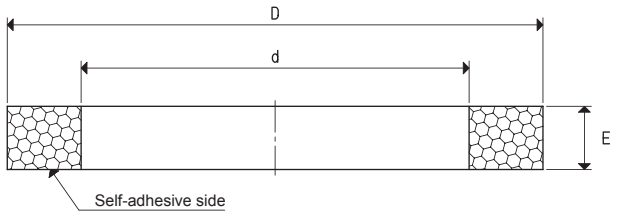

CUPS

Art.	Force Kg	D Ø	d Ø	E
01 127 15 *	17.5	127	92	15
01 180 15 *	38.5	180	140	15
01 220 15 *	63.6	220	180	15

* Complete the code indicating the compound: OF= geranium foam rubber; NF= neoprene foam rubber

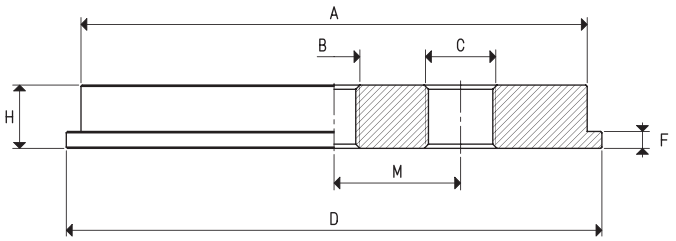

SUPPORTS

Art.	A Ø	B Ø	C Ø	D Ø	F	H	M	Support material	Cup art.	Weight Kg
00 08 107	120	M12	G3/8"	127	4	15	30	aluminium	01 127 15	0.48
00 08 58	160	M12	G3/8"	180	5	12	60	aluminium	01 180 15	0.74

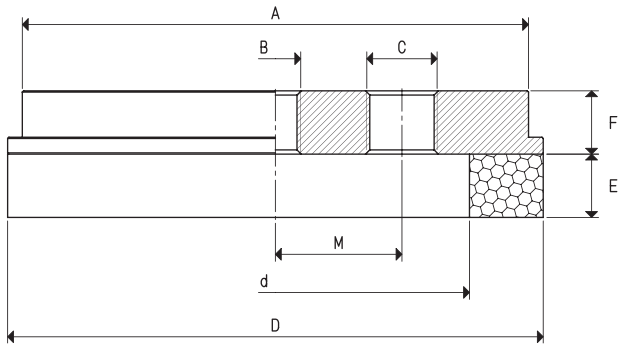

CUPS WITH SUPPORT

Art.	Force Kg	A Ø	B Ø	C Ø	D Ø	d Ø	E	F	M	Cup Art.	Support Art.	Weight Kg
08 127 15 *	17.5	120	M12	G3/8"	127	92	15	15	30	01 127 15	00 08 107	0.49
08 180 15 *	38.5	160	M12	G3/8"	180	140	15	12	60	01 180 15	00 08 58	0.78

* Complete the code indicating the compound: OF= geranium foam rubber; NF= neopropene foam rubber

Conversion ratio: inch = $\frac{mm}{25.4}$; pounds = $\frac{g}{453.6} = \frac{Kg}{0.4536}$

GAS - NPT thread adapters available at page 1.117

The distinctive feature of these cups is its lip made with nitrile rubber associated with GERANIUM or neoprene compounds. This allows a perfect grip on very rough or slotted surfaces. For this reason they are particularly suited for gripping and handling cement manufactures with with grit finished surfaces, marbles and bushammered or flamed granites.
The working temperature ranges between -40 °C and +80 °C for the GERANIUM OF compound and between -20 °C and +80 °C for the neoprene NF compound.
The anodised aluminium support has a central threaded hole for fastening it to the machine and a side one, also threaded, for the vacuum connection. The cup is cold-assembled onto the support with no adhesives.
For the spare part, you can simply request the desired cup indicated in the table in the desired compound.

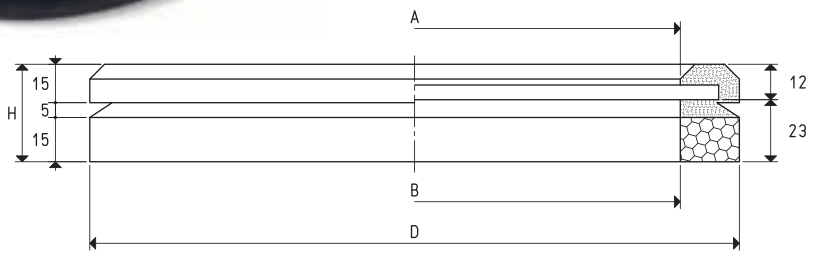

CUPS

Art.	Force Kg	A Ø	B Ø	D Ø	H	Compound
01 220 10 OF	63.6	180	180	220	35	geranium foam rubber
01 220 10 NF	63.6	180	180	220	35	neoprene foam rubber

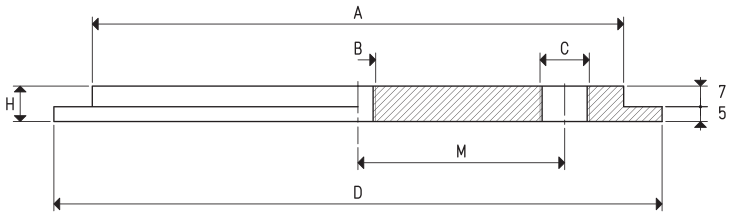

SUPPORTS

Art.	A Ø	B Ø	C Ø	D Ø	H	M	Support material	Cup art.	Weight Kg
00 08 37	180	M12	G3/8"	206	12	70	aluminium	01 220 10	0.95

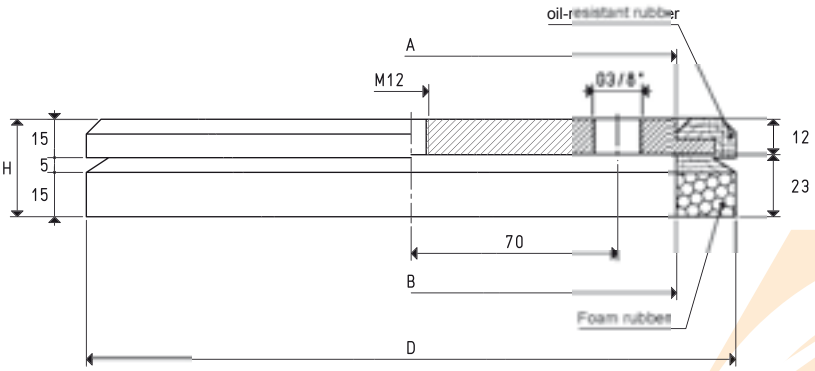

CUPS WITH SUPPORT

Art.	Force Kg	A Ø	B Ø	D Ø	H	Support Art.	Cup Art.	Weight Kg
08 220 10 OF	63.6	180	180	220	35	00 08 37	01 220 10 OF	0.98
08 220 10 NF	63.6	180	180	220	35	00 08 37	01 220 10 NF	0.97

Conversion ratio: inch = $\frac{mm}{25.4}$; pounds = $\frac{g}{453.6} = \frac{Kg}{0.4536}$

GAS - NPT thread adapters available at page 1.117

FLAT CIRCULAR CUPS WITH VULCANISED SUPPORT, FOR CLAMPING GLASS AND MARBLE

The manufacturers of glass and marble machining centres require increasingly accurate and safe clamping systems. This has led us to creating this new series of cups.
They are vulcanised onto a steel support and are provided with a hole in the centre for vacuum connection or for a BALL VALVE, as well as with 3÷4 holes on the internal circumference for housing allen screws.
Their extremely flexible lip allows them to easily adapt themselves to the sheets to be held, with no risk of deformation or rupture, even for the thinnest ones. The particular internal support plane of these cups ensure a high friction coefficient with the gripping surface and especially a considerable grip on wet glass and marble sheets, thanks to the water drainage. All this guarantees a firm and safe grip.
Furthermore, these cups feature the highest accuracy of their thickness, whose nominal height has a tolerance of only five hundredths of millimetre.
They are normally produced with oil-resistant rubber A, but they can be ordered in other compounds, listed at page 21, upon request and in minimum quantities to be defined in the order.

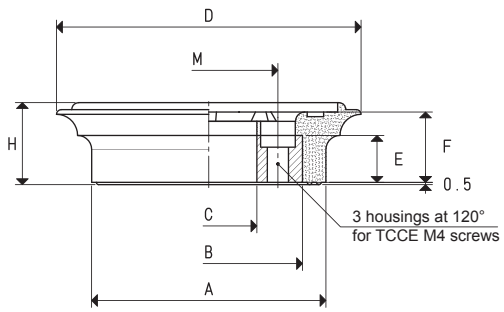

CUPS WITH VULCANISED SUPPORT

Art.	Force Kg	A Ø	B Ø	C Ø	D Ø	E	F	H	M Ø	Support material	Weight Kg
08 65 11 A	6.7	50	40	20.5	65	10	15	17.5	29.5	steel	0.09
08 85 11 A	12.0	70	60	40.5	85	10	15	17.5	49.5	steel	0.14

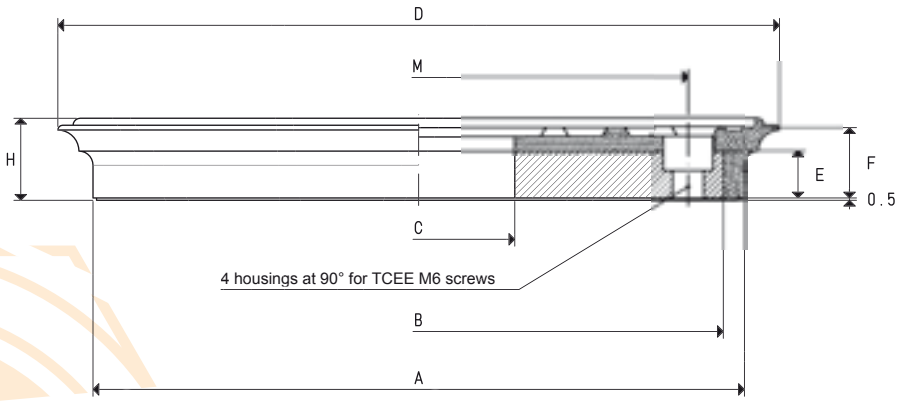

CUP WITH VULCANISED SUPPORT

Art.	Force Kg	A Ø	B Ø	C Ø	D Ø	E	F	H	M Ø	Support material	Weight Kg
08 150 11 A	42.7	139	130	41	150	10	15	17.5	115	steel	1.0

Conversion ratio: inch = $\frac{mm}{25.4}$; pounds = $\frac{g}{453.6} = \frac{Kg}{0.4536}$

These cups have been designed for lifting and handling heavy loads, both vertically and horizontally. They are vulcanised onto a steel support and are provided with a central threaded hole for its fastening to the machine and with a side threaded hole for vacuum connection.

These cups have a labyrinth graved face made with the same compound as the cup, which allows gripping even the thinnest and most fragile glass and marble sheets, with no bending in the gripping area. The shape of its lip and the choice of the compound whith which they are made with, ensure a firm grip on uneven and corrugated surfaces. The 08 .. 40 series, along with sharing the same features, have an internal vertical lip which allows them to grip extremely rough surfaces, such as embossed or profiled metal sheets, sawn marble or granite, wooden boards, precast cement, etc.

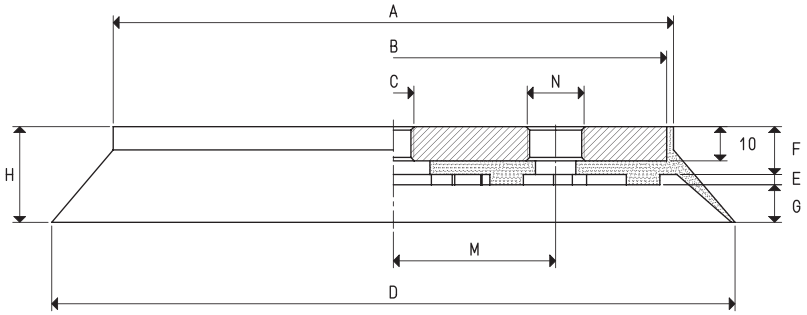

CUPS WITH VULCANISED SUPPORT

Art.	Force Kg	A Ø	B Ø	C Ø	D Ø	E	F	G	H	M	N Ø	Support material	Weight Kg
08 110 15 M8 *	23.7	74	70	M8	110	2	14	10	26	26.0	G1/4"	steel	0.35
08 110 15 *	23.7	74	70	M12	110	2	14	10	26	26.0	G1/4"	steel	0.33
08 150 15 *	45.0	115	110	M12	150	2	14	10	26	40.0	G3/8"	steel	0.83
08 200 10 *	78.5	164	160	M12	200	3	14	11	28	47.5	G3/8"	steel	1.75
08 250 10 *	122.6	214	210	M12	250	3	14	11	28	72.5	G3/8"	steel	3.00
08 300 10 *	176.6	266	260	M16	300	5	15	11	31	89.0	G1/2"	steel	4.70
08 350 10 *	240.4	316	310	M16	350	5	15	11	31	89.0	G1/2"	steel	6.60

* Complete the code indicating the compound: A= oil-resistant rubber; N= natural para rubber; S= silicon

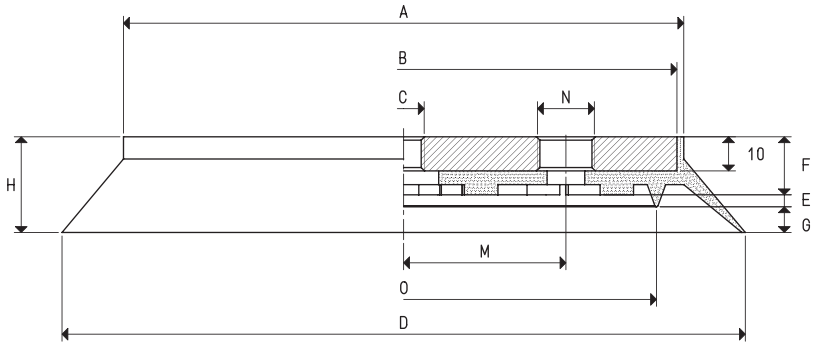

CUPS WITH VULCANISED SUPPORT

Art.	Force Kg	A Ø	B Ø	C Ø	D Ø	E	F	G	H	M	N Ø	O Ø	Support material	Weight Kg
08 110 40 M8*	15.5	74	70	M8	110	3	16	7	26	26.0	G1/4"	68	steel	0.36
08 110 40 *	15.5	74	70	M12	110	3	16	7	26	26.0	G1/4"	68	steel	0.34
08 150 40 *	22.8	115	110	M12	150	3	16	7	26	40.0	G3/8"	105	steel	0.85
08 200 40 *	45.0	164	160	M12	200	3	17	8	28	47.5	G3/8"	148	steel	1.70
08 250 40 *	78.5	214	210	M12	250	3	17	8	28	72.5	G3/8"	196	steel	3.00
08 300 40 *	122.6	266	260	M16	300	3	18	10	31	89.0	G1/2"	248	steel	4.60
08 350 40 *	176.6	316	310	M16	350	3	18	10	31	89.0	G1/2"	298	steel	6.50

* Complete the code indicating the compound: A= oil-resistant rubber; N= natural para rubber; S= silicon

Conversion ratio: inch = $\frac{mm}{25.4}$; pounds = $\frac{g}{453.6} = \frac{Kg}{0.4536}$

GAS - NPT thread adapters available at page 1.117

FLAT CIRCULAR CUP WITH VULCANISED SUPPORT

These cups are recommended for handling very heavy loads both vertically and horizontally.
They are vulcanised onto a steel support and have a labyrinth graved face made in the same compound as the cup.
The support is provided with four steel pins with self-locking nuts for guiding the cups and fastening them to the machine, as well as with a threaded sleeve for vacuum connection.
Morever, these cups are provided with four springs to cushion its impact with the load to be lifted.
These cups are available in the three standard compounds.

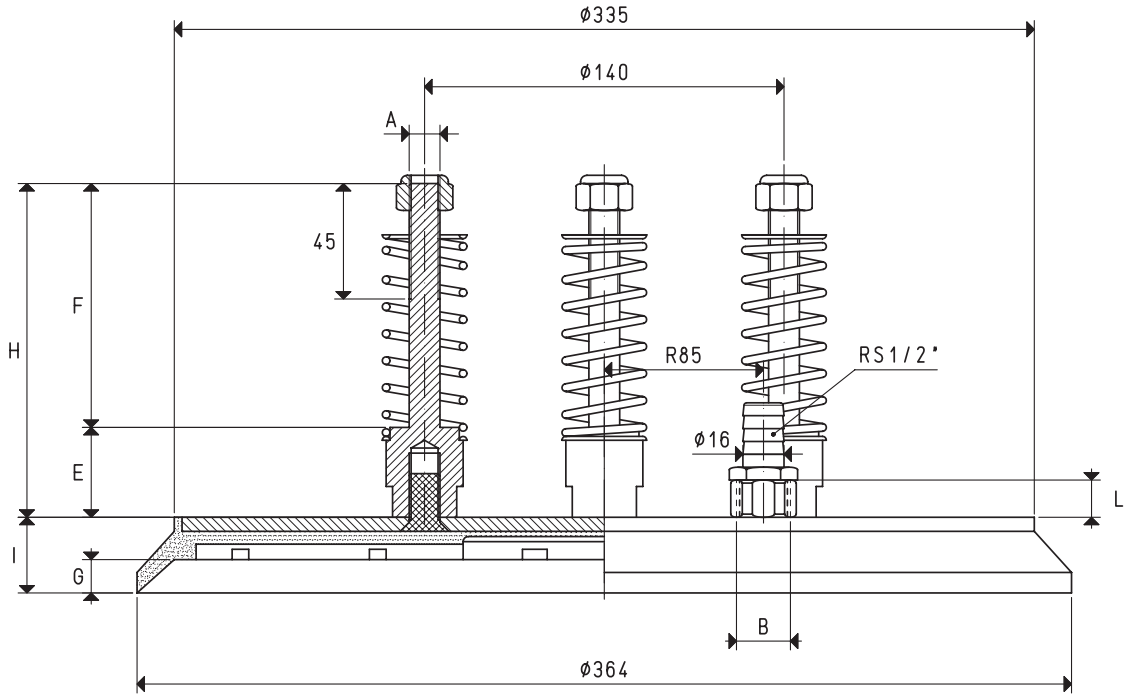

CUPS WITH VULCANISED SUPPORT

Art.	Force Kg	A Ø	B Ø	E	F	G	H	I	L	Support material	Weight Kg
08 360 10 *	254.3	M12	G1/2"	35	95	13	130	29	16	steel	4.75

* Complete the code indicating the compound: A= oil-resistant rubber; N= natural para rubber; S= silicon

Conversion ratio: inch = $\frac{mm}{25.4}$; pounds = $\frac{g}{453.6} = \frac{Kg}{0.4536}$

GAS - NPT thread adapters available at page 1.117

These cups have been designed for lifting objects with a central hole. Their very thin lip allow them to grip very rough surfaces, such as grinding wheels and discs.
They are particularly recommended for handling CDs,perforated discs, toothed wheels, pulleys and other similar objects.
Their supports are made with anodised aluminium and are provided with a threaded hole in the centre to allow suction, as well as its fastening to the machine.
The cups are cold-assembled onto them, with no adhesives.
To guarantee maximum flexibility, the cups for gripping grinding discs are made with natural para rubber N, while those for handling CDs are made with silicon S. Cups in special compounds indicated at page 21 can be provided upon request in minimum quantities to be defined in the order.
For the spare part, all you have to do is request the cup indicated in the table in the desired compound.

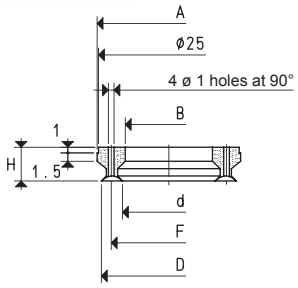

CUP

Art.	Force	A	B	D	d	F	H
	Kg	Ø	Ø	Ø	Ø	Ø	
01 24 06 S	0.6	25.5	15.5	24	16.5	20	6

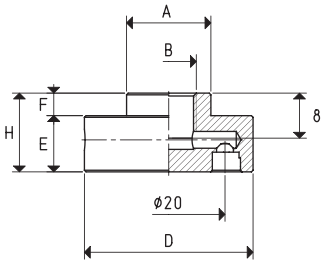

SUPPORTS

Art.	A	B	D	E	F	H	Support material	Cup art.	Weight
	Ø	Ø	Ø						g
00 08 232	15	G1/8"	30	10	4	14	aluminium	01 24 06	16.7

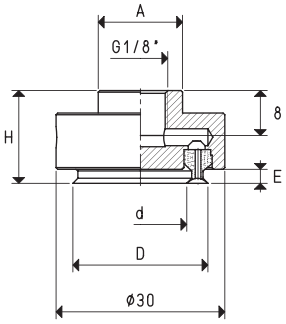

CUP WITH SUPPORT

Art.	A	D	d	E	H	Cup Art.	Support Art.	Weight
	Ø	Ø	Ø					g
08 24 06 S	15	24	16.5	2.5	16.5	01 24 06 S	00 08 232	18.1

Conversion ratio: inch = $\frac{mm}{25.4}$; pounds = $\frac{g}{453.6} = \frac{Kg}{0.4536}$

GAS - NPT thread adapters available at page 1.117

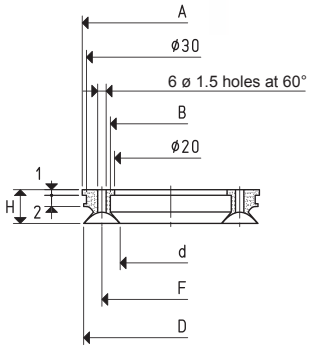

CUPS

Art.	Force	A	B	D	d	F	H
	Kg	Ø	Ø	Ø	Ø	Ø	
01 31 06 S	1.25	31.5	21.5	31	18	24.5	6

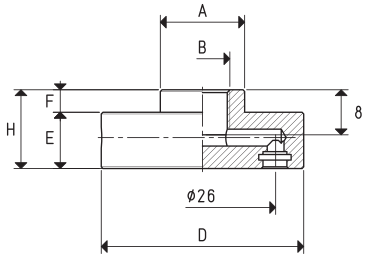

SUPPORTS

Art.	A	B	D	E	F	H	Support material	Cup art.	Weight
	Ø	Ø	Ø						g
00 08 231	15	G1/8"	36	10	4	14	aluminium	01 31 06	24.9

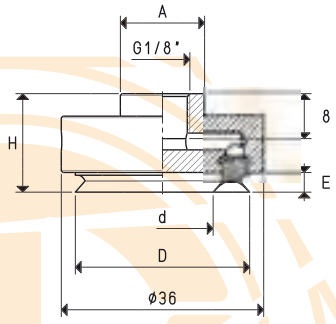

CUPS WITH SUPPORT

Art.	A	D	d	E	H	Cup Art.	Support Art.	Weight
	Ø	Ø	Ø					g
08 31 06 S	15	31	18	3.6	17.6	01 31 06 S	00 08 231	26.6

Conversion ratio: inch = $\frac{mm}{25.4}$; pounds = $\frac{g}{453.6} = \frac{Kg}{0.4536}$

GAS - NPT thread adapters available at page 1.117

CUPS

Art.	Force	A	B	C	D	d	E	H	M
	Kg	Ø	Ø	Ø	Ø	Ø			Ø
01 46 13 N	3.87	35	23	3	46	12	8.5	12.5	29
01 73 14 N	9.02	60	40	5	73	27	10.0	14.0	50
01 95 14 N	16.28	71	51	6	95	27	10.0	14.5	61

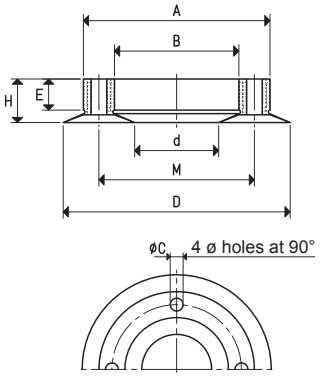

SUPPORTS

Art.	A	B	C	D	E	F	G	H	N	Support	Cup	Weight
	Ø	Ø	Ø	Ø					Ø	material	art.	g
00 08 68	40	M12	23	35	7	10	18	25	20	aluminium	01 46 13	47.2
00 08 72	65	G3/8"	40	60	10	15	25	35	25	aluminium	01 73 14	169.1
00 08 73	76	G3/8"	51	71	10	15	27	37	25	aluminium	01 95 14	266.0

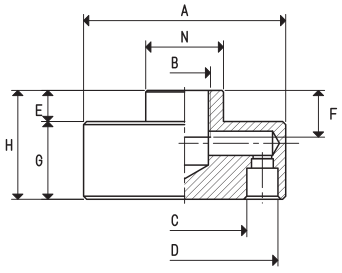

CUPS WITH SUPPORT

Art.	Force	A	B	D	d	E	F	H	N	Cup	Support	Weight
	Kg	Ø	Ø	Ø	Ø				Ø	Art.	Art.	g
08 46 13 N	3.87	40	M12	46	12	4.5	10	29.5	20	01 46 13 N	00 08 68	53.1
08 73 14 N	9.02	65	G3/8"	73	27	4.0	15	39.0	25	01 73 14 N	00 08 72	189.4
08 95 14 N	16.28	76	G3/8"	95	27	5.5	15	42.5	25	01 95 14 N	00 08 73	292.9

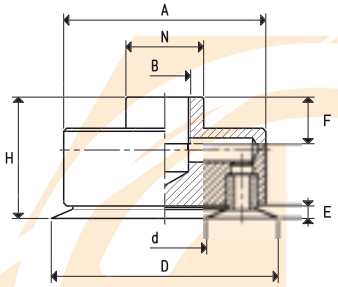

Conversion ratio: inch = $\frac{mm}{25.4}$; pounds = $\frac{g}{453.6} = \frac{Kg}{0.4536}$

GAS - NPT thread adapters available at page 1.117

These cups are recommended for working surfaces for clamping wooden panels, marble, granite, ceramic, glass, etc. They are obviously used to handle these materials. Their vertical and low lip allows for a firm grip on the surface to be clamped or handled, eliminating any oscillation and considerably reduces the air volume contained within, thus ensuring a quicker gripping and release. Cups in special compounds indicated at page 21 can be provided upon request in minimum quantities to be defined in the order.
They can be cold-assembled, with no adhesives, onto an anodised aluminium support, provided with a central threaded hole to ease its fastening to the machine.
Larger supports are provided with two threaded holes equidistant from the centre, to allow the possible insertion of guiding anti-rotation pins.
For the spare part, all you have to do is request the cup indicated in the table in the desired compound.

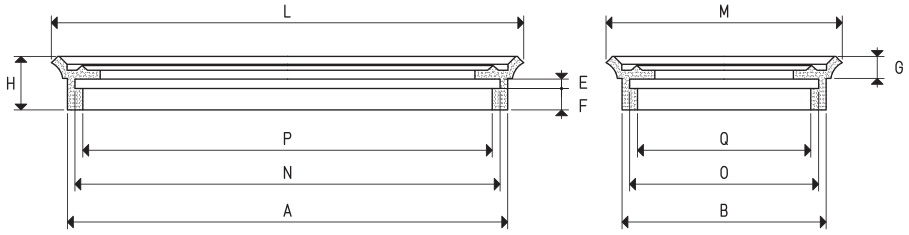

CUPS

Art.	Force Kg	A	B	E	F	G	H	L	M	N	O	P	Q
01 40 75 *	6.7	64	29	3	7.5	6.5	16.0	75	40	59	24	54	19
01 120 90 *	24.0	107	78	3	7.5	7.5	17.5	117	87	102	73	97	68
01 150 65 *	21.5	137	52	3	7.5	7.5	16.5	147	62	132	47	127	42
01 150 75 *	25.0	137	62	3	7.5	7.5	16.5	147	72	132	57	127	52

* Complete the code indicating the compound: A= oil-resistant rubber; N= natural para rubber; S= silicon

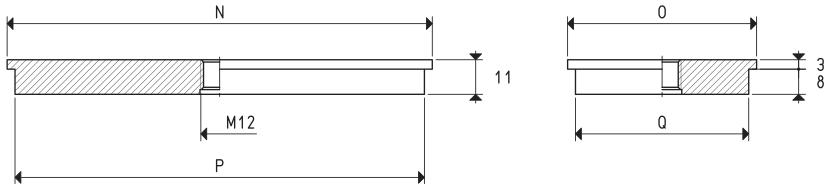

SUPPORTS

Art.	N	O	P	Q	Support material	Cup art.	Weight g
00 08 31	60	25	55	20	aluminium	01 40 75	34.1
00 08 34	107	75	102	70	aluminium	01 120 90	215.5
00 08 144	135	50	130	45	aluminium	01 150 65	176.1
00 08 59	135	60	130	55	aluminium	01 150 75	218.4

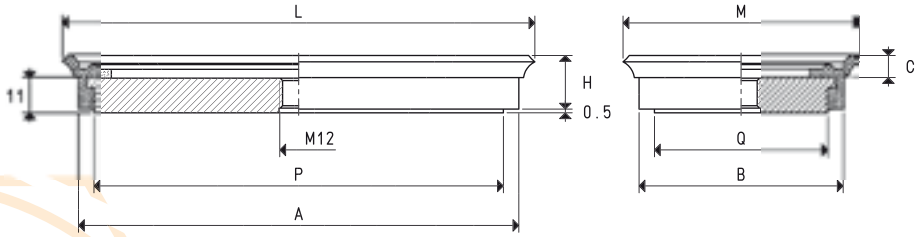

CUPS WITH SUPPORT

Art.	Force Kg	A	B	C	H	L	M	P	Q	Cup Art.	Support Art.	Weight g
08 40 75 *	6.7	66	31	6.5	16.0	76	41	55	20	01 40 75	00 08 31	49.7
08 120 90 *	24.0	112	80	7.5	17.5	120	90	102	70	01 120 90	00 08 34	254.3
08 150 65 *	21.5	140	55	7.5	16.5	150	65	130	45	01 150 65	00 08 144	217.3
08 150 75 *	25.0	140	65	7.5	16.5	150	75	130	55	01 150 75	00 08 59	259.6

* Complete the code indicating the compound: A= oil-resistant rubber; N= natural para rubber; S= silicon

Conversion ratio: inch = $\frac{mm}{25.4}$; pounds = $\frac{g}{453.6} = \frac{Kg}{0.4536}$

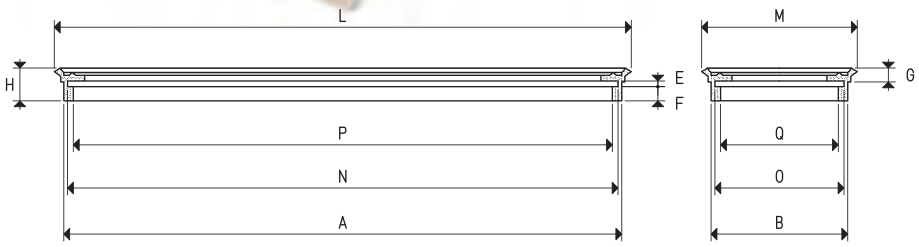

CUPS

Art.	Force Kg	A	B	E	F	G	H	L	M	N	O	P	Q
01 300 80 *	60.0	288	68	3	7.5	7.5	17.5	297	77	284	64	278	58
01 300 150 *	113.0	288	138	3	7.5	7.5	17.5	297	147	284	134	278	128

* Complete the code indicating the compound: A= oil-resistant rubber; N= natural para rubber; S= silicon

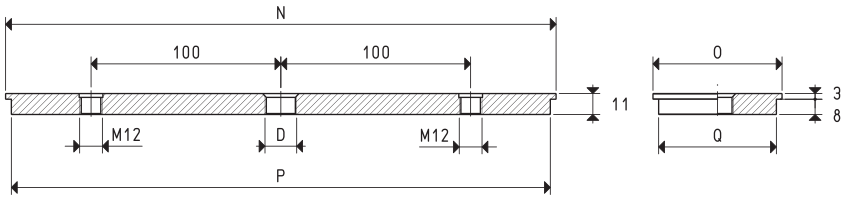

SUPPORTS

Art.	D Ø	N	O	P	Q	Support material	Cup art.	Weight Kg
00 08 116	G3/8"	290	68	284	62	aluminium	01 300 80	0.53
00 08 117	G1/2"	290	140	284	134	aluminium	01 300 150	1.13

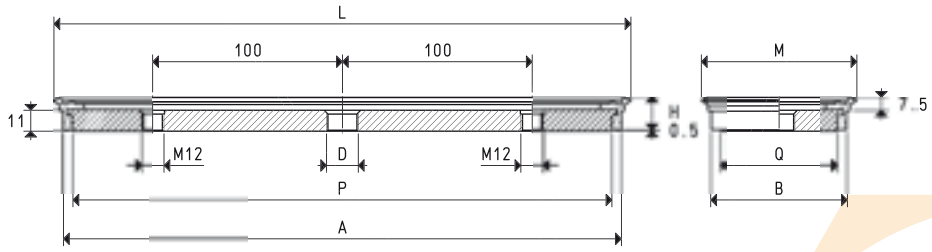

CUPS WITH SUPPORT

Art.	Force Kg	A	B	D Ø	H	L	M	P	Q	Cup Art.	Support Art.	Weight Kg
08 300 80 *	60.0	290	70	G3/8"	17.5	300	80	284	62	01 300 80	00 08 116	0.61
08 300 150 *	113.0	290	140	G1/2"	17.5	300	150	284	134	01 300 150	00 08 117	1.22

* Complete the code indicating the compound: A= oil-resistant rubber; N= natural para rubber; S= silicon

Conversion ratio: inch = $\frac{mm}{25.4}$; pounds = $\frac{g}{453.6} = \frac{Kg}{0.4536}$

GAS - NPT thread adapters available at page 1.117

These cups share the same technical and mechanical features with the ones described above, but their support has a special non-slip plastic coating that make them particularly suited for clamping glass and smooth marble.
A built-in stainless steel mesh filter in the suction hole and an O-ring seal at the base of their support are the other main features of these cups.
They are also provided with two or for housings for TCCE screws, according to their size, for fixing them to the workstation.

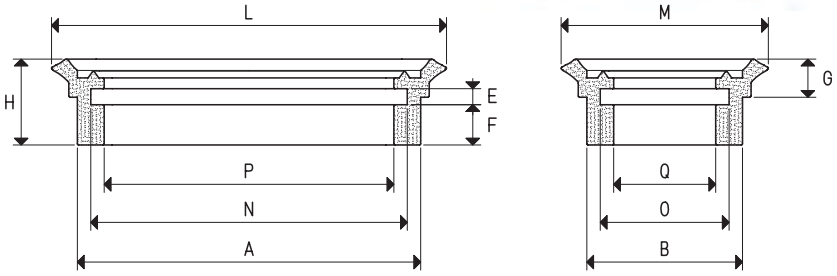

CUPS

Art.	Force Kg	A	B	E	F	G	H	L	M	N	O	P	Q
01 40 75 *	6.7	64	29	3	7.5	6.5	16.0	75	40	59	24	54	19

* Complete the code indicating the compound: A= oil-resistant rubber; N= natural para rubber; S= silicon

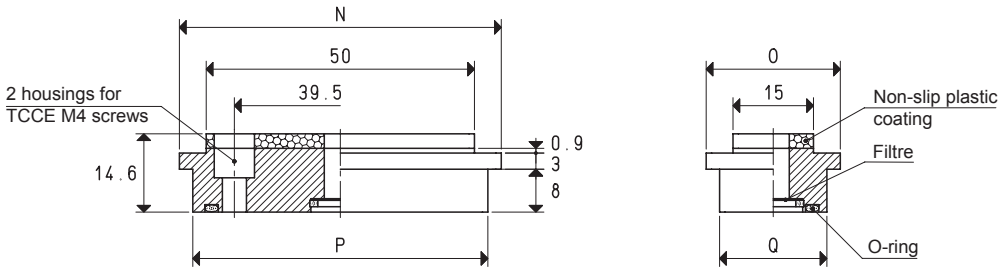

SUPPORT

Art.	N	O	P	Q	Support material	Cup art.	Weight g
00 08 184	60	25	55	20	aluminium	01 40 75	38.7

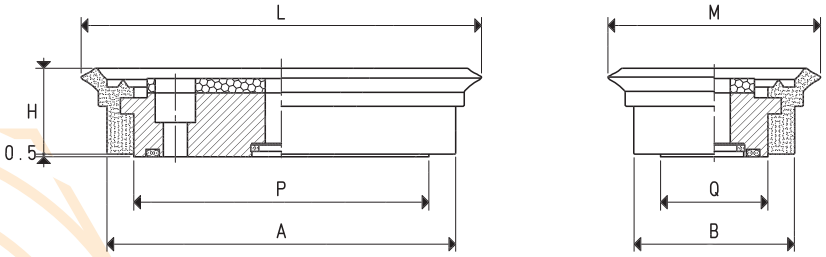

CUP WITH SUPPORT

Art.	Force Kg	A	B	H	L	M	P	Q	Cup Art.	Support Art.	Weight g
08 40 75 M1 *	6.7	66	31	16.0	76	41	55	20	01 40 75	00 08 184	53.5

* Complete the code indicating the compound: A= oil-resistant rubber; N= natural para rubber; S= silicon

Conversion ratio: inch = $\frac{mm}{25.4}$; pounds = $\frac{g}{453.6} = \frac{Kg}{0.4536}$

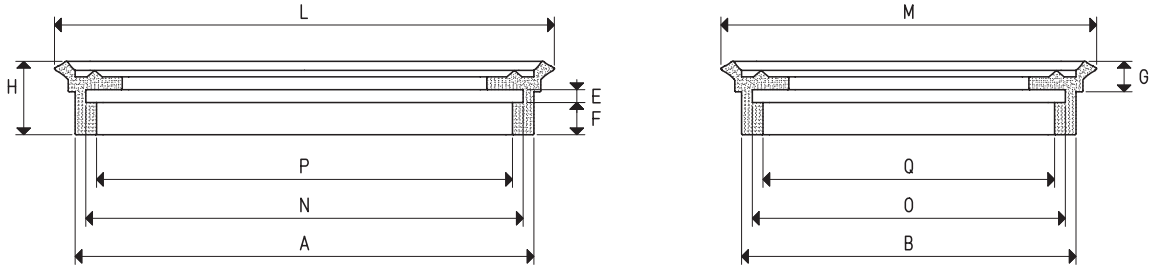

CUPS

Art.	Force Kg	A	B	E	F	G	H	L	M	N	O	P	Q
01 120 90 *	24.0	107	78	3	7.5	7.5	17.5	117	87	102	73	97	68
01 150 75 *	25.0	137	62	3	7.5	7.5	16.5	147	72	132	57	127	52

* Complete the code indicating the compound: A= oil-resistant rubber; N= natural para rubber; S= silicon

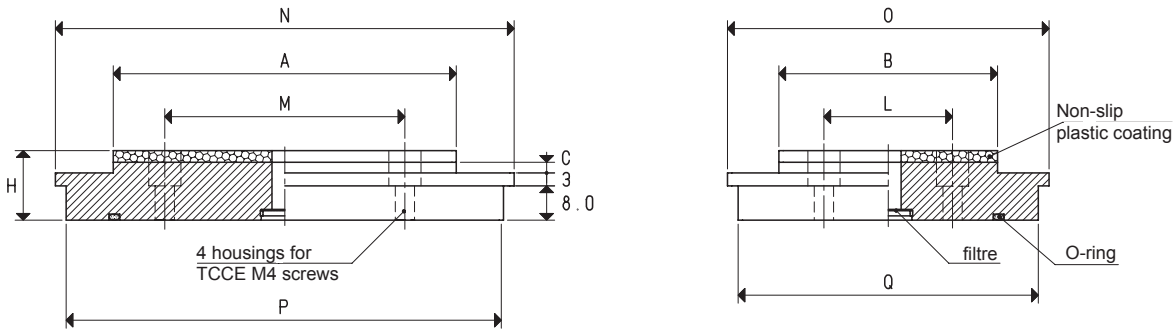

SUPPORTS

Art.	A	B	C	H	L	M	N	O	P	Q	Support material	Cup art.	Weight g
00 08 256	82	50	2.5	16.2	30	56	107	75	102	70	aluminium	01 120 90	244.5
00 08 257	110	35	2.3	16.4	20	92	135	60	130	55	aluminium	01 150 75	247.9

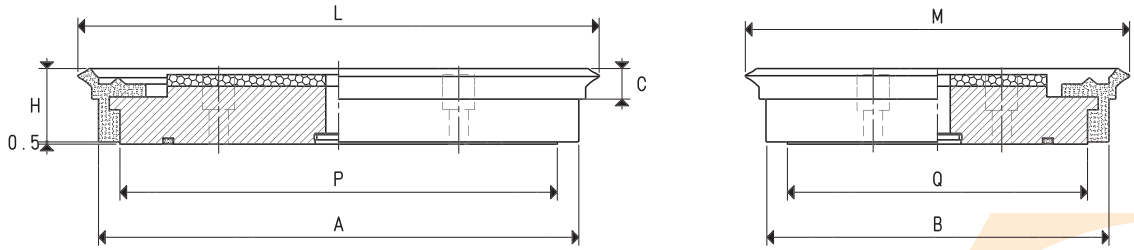

CUPS WITH SUPPORT

Art.	Force Kg	A	B	C	H	L	M	P	Q	Cup Art.	Support Art.	Weight g
08 120 90 M1 *	24.0	112	80	7.5	17.5	120	90	102	70	01 120 90	00 08 256	283.3
08 150 75 M1 *	25.0	140	65	7.5	16.5	150	75	130	55	01 150 75	00 08 257	289.1

* Complete the code indicating the compound: A= oil-resistant rubber; N= natural para rubber; S= silicon

Conversion ratio: inch = $\frac{mm}{25.4}$; pounds = $\frac{g}{453.6} = \frac{Kg}{0.4536}$

FLAT RECTANGULAR FOAM RUBBER CUPS WITH SUPPORT

Foam rubber cups are made with a special compound called GERANIUM indicated with OF, with a density that allows them to grip uneven and very rough surfaces and still maintain their elasticity even after many working cycles.
These foam rubber cups have a self-adhesive side for a quick fixing to their support. These cups have been designed for handling loads with raw or very rough surfaces (sawn, bushammered or flamed marble, textured, non-slip or profiled metal sheet, striped plexiglas, raw cement manufactures, garden tiles with fret, etc.) and for all those cases in which traditional cups cannot be used. In case of lubricated gripping surfaces, we recommend using neoprene foam rubber NF.
The working temperature ranges from -40 °C to +80 °C for GERANIUM foam rubber OF and from -20 °C to +80 °C for neoprene foam rubber NF.
Their supports are made with anodised aluminium and they are provided with a central threaded hole to allow its fastening to the machine.
Larger supports, on the other hand, are provided with two threaded holes equidistant from the centre, for the possible insertion of guiding, anti-rotation pins.
For the spare part, all you have to do is request the cup indicated in the table in the desired compound.

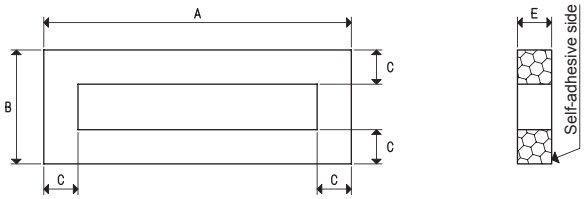

CUPS

Art.	Force Kg	A	B	C	E
01 107 75 *	9.0	107	75	15	15
01 135 50 *	6.0	135	50	15	15
01 135 60 *	8.0	135	60	15	15

* Complete the code indicating the compound: OF= geranium foam rubber; NF= neoprene foam rubber

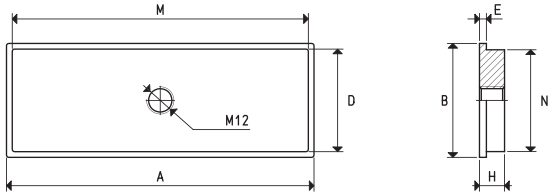

SUPPORTS

Art.	A	B	D	E	H	M	N	Support material	Cup art.	Weight g
00 08 34	107	75	70	3	11	102	70	aluminium	01 107 75	215.5
00 08 144	135	50	45	3	11	130	45	aluminium	01 135 50	176.1
00 08 59	135	60	55	3	11	130	55	aluminium	01 135 60	218.4

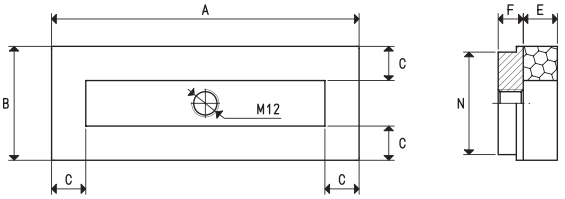

CUPS WITH SUPPORT

Art.	Force Kg	A	B	C	E	F	N	Cup Art.	Support. Art.	Weight g
08 107 75 *	9	107	75	15	15	11	70	01 107 75	00 08 34	229.5
08 135 50 *	6	135	50	15	15	11	45	01 135 50	00 08 144	190.6
08 135 60 *	8	135	60	15	15	11	55	01 135 60	00 08 59	233.0

* Complete the code indicating the compound: OF= geranium foam rubber; NF= neoprene foam rubber

Conversion ratio: inch = $\frac{mm}{25.4}$; pounds = $\frac{g}{453.6}$ = $\frac{Kg}{0.4536}$

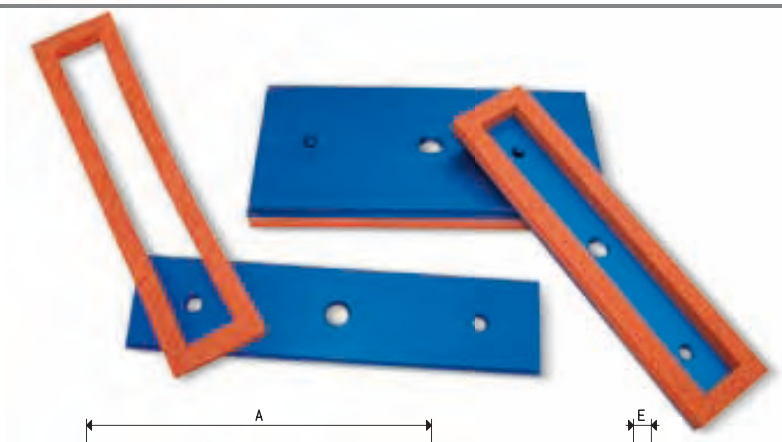

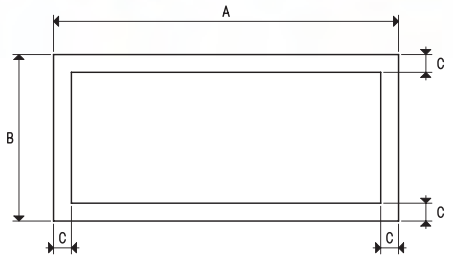

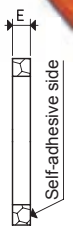

CUPS

Art.	Force Kg	A	B	C	E
01 290 68 *	25	290	68	15	15
01 290 140 *	72	290	140	15	15

* Complete the code indicating the compound: OF= geranium foam rubber; NF= neoprene foam rubber

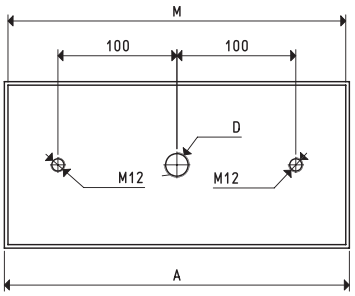

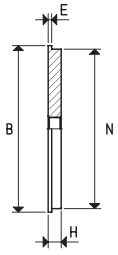

SUPPORTS

Art.	A	B	D Ø	E	H	M	N	Support material	Cup art.	Weight Kg
00 08 116	290	68	G3/8"	3	11	284	62	aluminium	01 290 68	0.53
00 08 117	290	140	G1/2"	3	11	284	134	aluminium	01 290 140	1.13

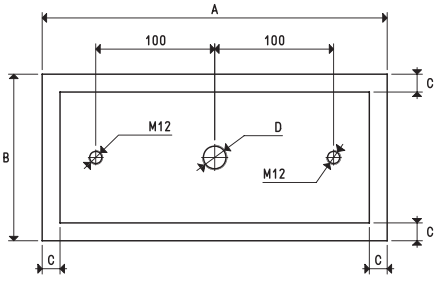

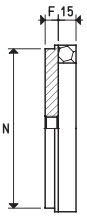

CUPS WITH SUPPORT

Art.	Force Kg	A	B	C	D Ø	F	N	Cup Art.	Support Art.	Weight Kg
08 290 68 *	25	290	68	15	G3/8"	11	62	01 290 68	00 08 116	0.56
08 290 140 *	72	290	140	15	G1/2"	11	134	01 290 140	00 08 117	1.15

* Complete the code indicating the compound: OF= geranium foam rubber; NF= neoprene foam rubber

Conversion ratio: inch = $\frac{mm}{25.4}$; pounds = $\frac{g}{453.6} = \frac{Kg}{0.4536}$

GAS - NPT thread adapters available at page 1.117

Foam rubber cups are made with a special compound called GERANIUM indicated with OF, with a density that allows them to grip uneven and very rough surfaces and still maintain their elasticity even after many working cycles.
These foam rubber cups have a self-adhesive side for a quick fixing to their support. These cups have been designed for handling loads with raw or very rough surfaces (sawn, bushammered or flamed marble, textured, non-slip or profiled metal sheet, striped plexiglas, raw cement manufactures, garden tiles with fret, etc.) and for all those cases in which traditional cups cannot be used. In case of lubricated gripping surfaces, we recommend using neoprene foam rubber NF.
The working temperature ranges from -40 °C to +80 °C for GERANIUM foam rubber OF and from -20 °C to +80 °C for neoprene foam rubber NF.
Their supports are made with anodised aluminium and they are provided with a central threaded hole to allow its fastening to the machine.
Larger supports, on the other hand, are provided with two threaded holes equidistant from the centre, for the possible insertion of guiding, anti-rotation pins.
For the spare part, all you have to do is request the cup indicated in the table in the desired compound.

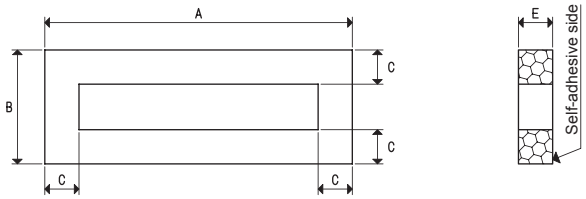

CUPS

Art.	Force Kg	A	B	C	E
01 107 75 *	9.0	107	75	15	15
01 135 50 *	6.0	135	50	15	15
01 135 60 *	8.0	135	60	15	15

* Complete the code indicating the compound: OF= geranium foam rubber; NF= neoprene foam rubber

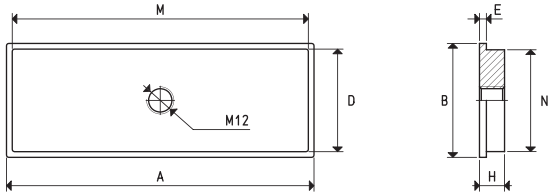

SUPPORTS

Art.	A	B	D	E	H	M	N	Support material	Cup art.	Weight g
00 08 34	107	75	70	3	11	102	70	aluminium	01 107 75	215.5
00 08 144	135	50	45	3	11	130	45	aluminium	01 135 50	176.1
00 08 59	135	60	55	3	11	130	55	aluminium	01 135 60	218.4

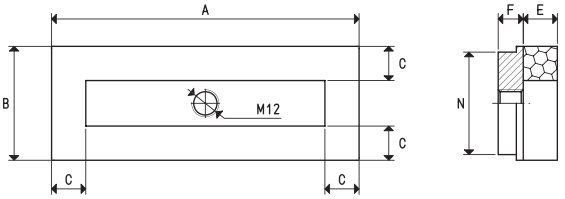

CUPS WITH SUPPORT

Art.	Force Kg	A	B	C	E	F	N	Cup Art.	Support. Art.	Weight g
08 107 75 *	9	107	75	15	15	11	70	01 107 75	00 08 34	229.5
08 135 50 *	6	135	50	15	15	11	45	01 135 50	00 08 144	190.6
08 135 60 *	8	135	60	15	15	11	55	01 135 60	00 08 59	233.0

* Complete the code indicating the compound: OF= geranium foam rubber; NF= neoprene foam rubber

Conversion ratio: inch = $\frac{mm}{25.4}$; pounds = $\frac{g}{453.6} = \frac{Kg}{0.4536}$

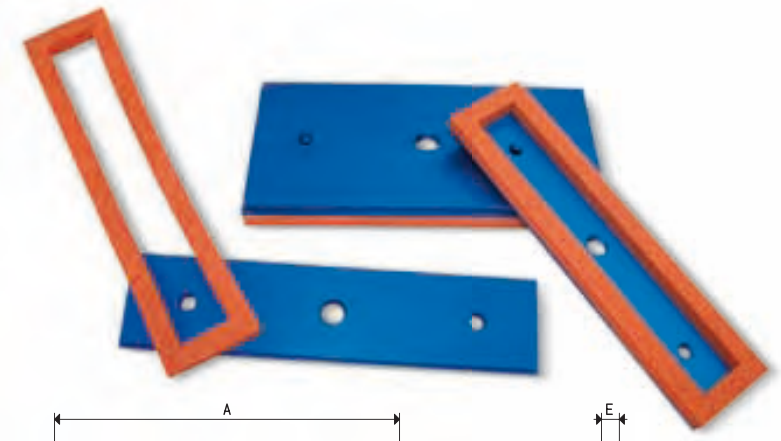

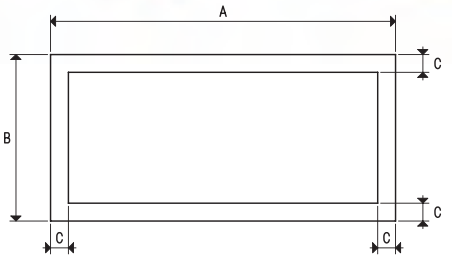

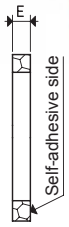

CUPS

Art.	Force Kg	A	B	C	E
01 290 68 *	25	290	68	15	15
01 290 140 *	72	290	140	15	15

* Complete the code indicating the compound: OF= geranium foam rubber; NF= neoprene foam rubber

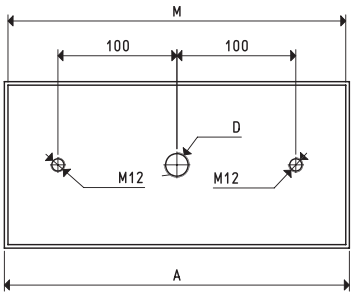

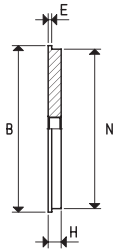

SUPPORTS

Art.	A	B	D Ø	E	H	M	N	Support material	Cup art.	Weight Kg
00 08 116	290	68	G3/8"	3	11	284	62	aluminium	01 290 68	0.53
00 08 117	290	140	G1/2"	3	11	284	134	aluminium	01 290 140	1.13

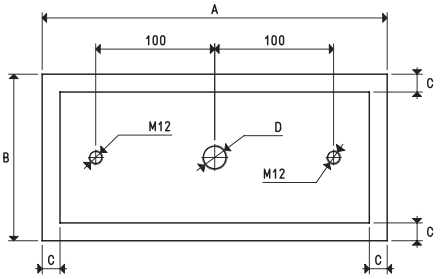

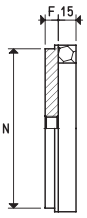

CUPS WITH SUPPORT

Art.	Force Kg	A	B	C	D Ø	F	N	Cup Art.	Support Art.	Weight Kg
08 290 68 *	25	290	68	15	G3/8"	11	62	01 290 68	00 08 116	0.56
08 290 140 *	72	290	140	15	G1/2"	11	134	01 290 140	00 08 117	1.15

* Complete the code indicating the compound: OF= geranium foam rubber; NF= neoprene foam rubber

Conversion ratio: inch = $\frac{mm}{25.4}$; pounds = $\frac{g}{453.6} = \frac{Kg}{0.4536}$

GAS - NPT thread adapters available at page 1.117

The manufacturers of glass and marble machining centres require increasingly accurate and safe clamping systems. This has led us to creating this new series of cups.
They are vulcanised onto a steel support and are provided with a hole in the centre for vacuum connection or for a BALL VALVE, as well as with 2 holes on the internal circumference for housing allen screws.
Their extremely flexible lip allows them to easily adapt themselves to the sheets to be held, with no risk of deformation or rupture, even for the thinnest ones. The particular internal support plane of these cups ensure a high friction coefficient with the gripping surface and a considerable grip on wet glass and marble sheets, thanks to the water drainage. All this guarantees a firm and safe grip.
Furthermore, these cups feature the highest accuracy of their thickness, whose nominal height has a tolerance of only five hundredths of millimetre.
They are normally produced with oil-resistant rubber A, but they can be ordered in other compounds, listed at page 21, upon request and in minimum quantities to be defined in the order.

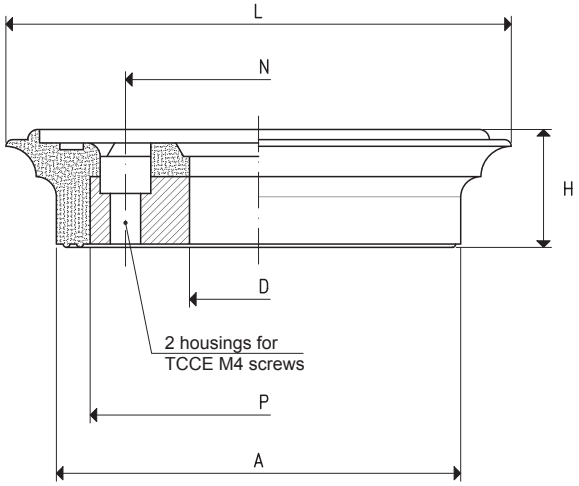

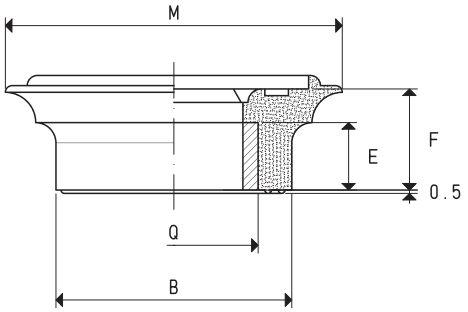

CUP WITH VULCANISED SUPPORT

Art.	Force Kg	A	B	D Ø	E	F	H	L	M	N	P	Q	Support material	Weight g
08 50 75 A	7.5	60	35	20.5	10	15	17.5	75	50	39.5	50	25	steel	92

Conversion ratio: inch = $\frac{mm}{25.4}$; pounds = $\frac{g}{453.6} = \frac{Kg}{0.4536}$

These oval cups are are recessed on moulders in order to hold a side of the cardboard box during the moulding process by means of traditional cups on the opposite side.
Once assembled with their support, they can be used for handling boxes, plastic objects or anything with a limited gripping suface.
Their anodised aluminium support have a central threaded hole to fasten it to the machine. They are also provided with a nickel-plated brass plate to hold the cup in its housing and with one or two stainless steel screws for fixing them.
For the spare part, all you have to do is request the cup indicated in the table in the desired compound.

CUP

Art.	Force Kg	A	B	C	D
01 12 20 *	0.52	15	11.5	17	20

* Complete the code indicating the compound: A= oil-resistant rubber; N= natural para rubber; S= silicon

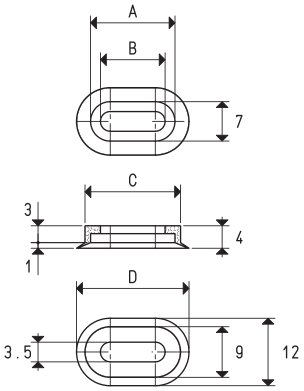

SUPPORT

Art.	B Ø	E	F	Support material	Cup art.	Weight g
00 08 70	G1/8"	8.5	6.5	aluminium	01 12 20	5.4

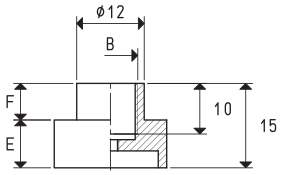

fixing plate art. **00 08 97**

TSP M3x5 screw art. **00 08 103**

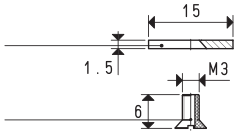

Note: By ordering art. **00 08 70**, the fixing plate and the TSP screw will also be provided.

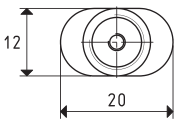

CUP WITH SUPPORT

Art.	Force Kg	D	Cup Art.	Support Art.	Weight g
08 12 20 *	0.52	20	01 12 20	00 08 70	5.8

* Complete the code indicating the compound: A= oil-resistant rubber; N= natural para rubber; S= silicon

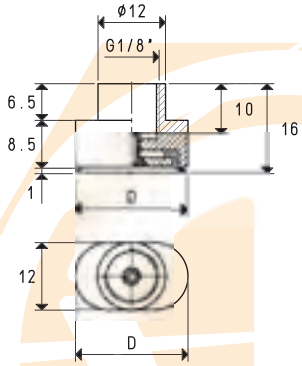

Conversion ratio: inch = $\frac{mm}{25.4}$; pounds = $\frac{g}{453.6}$ = $\frac{Kg}{0.4536}$

GAS - NPT thread adapters available at page 1.117

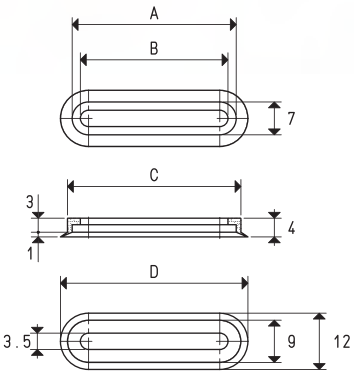

CUPS

Art.	Force Kg	A	B	C	D
01 12 30 *	0.82	25	21.5	27	30
01 12 40 *	1.12	35	31.5	37	40
01 12 50 *	1.57	50	46.5	52	55

* Complete the code indicating the compound: A= oil-resistant rubber; N= natural para rubber; S= silicon

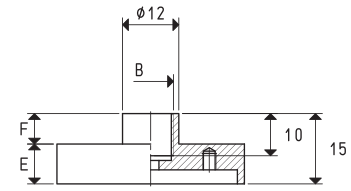

SUPPORTS

Art.	A	B Ø	C	E	F	Support material	Cup art.	Weight g
00 08 71	30	G1/8"	25	8.5	6.5	aluminium	01 12 30	7.8
00 08 75	40	G1/8"	35	8.5	6.5	aluminium	01 12 40	11.4
00 08 76	55	G1/8"	50	8.5	6.5	aluminium	01 12 50	15.5

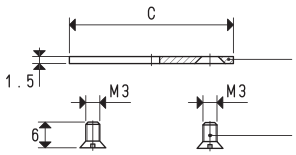

fixing plate art. **00 08 98** for supp. **00 08 71**
art. **00 08 99** for supp. **00 08 75**
art. **00 08 100** for supp. **00 08 76**

2 TSP screws M3x5 art. **00 08 102**

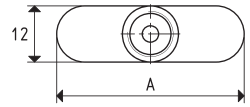

Note: By ordering the art. referring to the support, the fixing plate and the TSP screws will also be provided

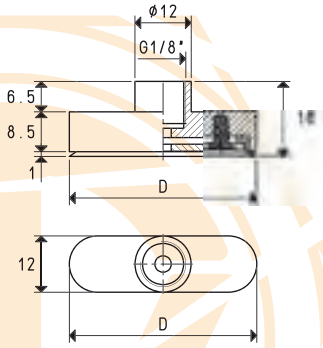

CUPS WITH SUPPORT

Art.	Force Kg	D	Cup Art.	Support Art.	Weight g
08 12 30 *	0.82	30	01 12 30	00 08 71	8.3
08 12 40 *	1.12	40	01 12 40	00 08 75	12.0
08 12 50 *	1.57	55	01 12 50	00 08 76	16.2

* Complete the code indicating the compound: A= oil-resistant rubber; N= natural para rubber; S= silicon

Convertion ratio: inch = $\frac{mm}{25.4}$; pounds = $\frac{g}{453.6} = \frac{Kg}{0.4536}$

GAS-NPT thread adapters available at page 1.117

The cups described in this page have been designed for for handling X-ray sheets in hospital or other electrostatically charged films.
Their shape allows them to pick up one sheet at a time without deforming or crumpling the gripping surface and without leaving stains or prints, thanks to the special compound with which they are made. Their aluminium supports are vulcanised onto the cups. One with a smooth hole for fixing the cup to the machine with an allen screw, with the housing on the inside and one with a threaded hole. A side slot on the support prevents the cup from rotating. These cups are recommended for gripping and handling magnetic sheets, plastic sheets, thiin rubber sheets, laminated cardboard ,etc.

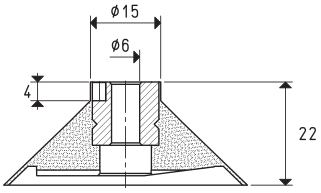

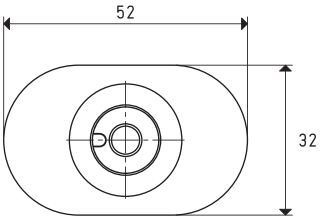

CUP WITH VULCANISED SUPPORT

Art.	Force Kg	Support material	Weight g
08 32 52 *	3.00	aluminium	12.1

* Complete the code indicating the compound: A= oil-resistant rubber; N= natural para rubber; S= silicon

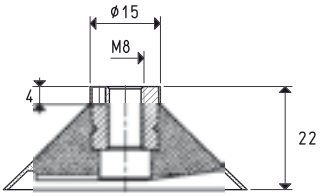

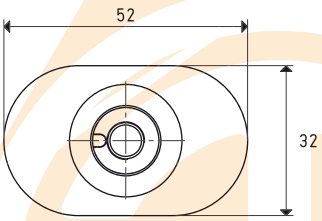

CUP WITH VULCANISED SUPPORT

Art.	Force Kg	Support material	Weight g
08 32 99 *	3.00	aluminium	11.9

* Complete the code indicating the compound: A= oil-resistant rubber; N= natural para rubber; S= silicon

Convertion ratio: inch = $\frac{mm}{25.4}$; pounds = $\frac{g}{453.6}$ = $\frac{Kg}{0.4536}$

These cups have been designed for handling cylindrical objects, such as pipes, bottles, round profiles, etc.
Its aluminium support is vulanised onto the cup and it is provided with a central threaded hole to ease its fastening to the machine and with a side hole for the possible insertion of a guiding, anti-rotation pin.
These cups can be provided in the three standard compounds: oil-resistant rubber A, natural para rubber N and silicon S.

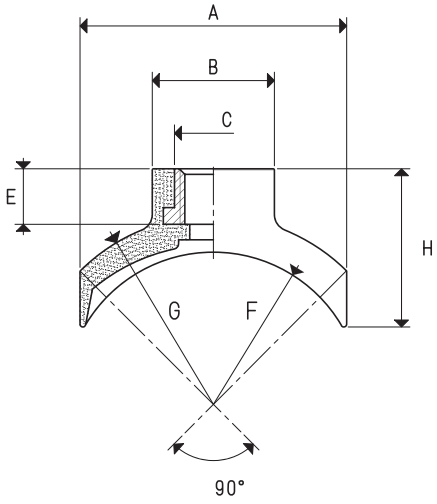

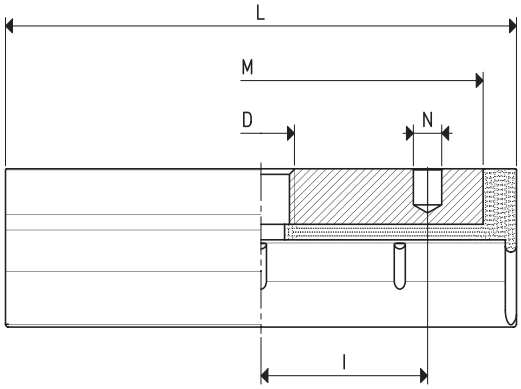

CONCAVE CUPS WITH VULCANISED SUPPORT

Art.	Force	gripping Ø		A	B	C	D	E	F	G	H	I	L	M	N	Support	Weight
	Kg	min	max				Ø								Ø	material	g
08 30 60 *	3.5	30	45	26	15	10	M8	8	16	19	20.0	20	60	50	4.1	aluminium	20.3
08 40 90 *	8.6	50	80	40	20	14	M12	10	23	28	25.0	30	92	80	5.1	aluminium	54.8
08 50 90 *	10.5	60	95	48	22	14	M12	10	28	34	28.5	30	92	80	5.1	aluminium	62.5

* Complete the code indicating the compound: A= oil-resistant rubber; N= natural para rubber; S= silicon

Convertion ratio: inch = $\frac{mm}{25.4}$; pounds = $\frac{g}{453.6} = \frac{Kg}{0.4536}$

The cups described in this page have been designed for for handling X-ray sheets in hospital or other electrostatically charged films.
Their shape allows them to pick up one sheet at a time without deforming or crumpling the gripping surface and without leaving stains or prints, thanks to the special compound with which they are made. Their aluminium supports are vulcanised onto the cups. One with a smooth hole for fixing the cup to the machine with an allen screw, with the housing on the inside and one with a threaded hole. A side slot on the support prevents the cup from rotating. These cups are recommended for gripping and handling magnetic sheets, plastic sheets, thiin rubber sheets, laminated cardboard ,etc.

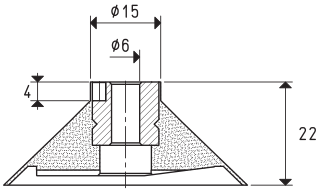

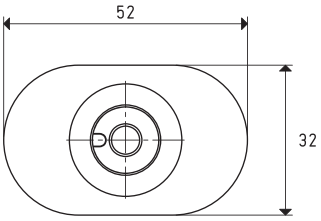

CUP WITH VULCANISED SUPPORT

Art.	Force Kg	Support material	Weight g
08 32 52 *	3.00	aluminium	12.1

* Complete the code indicating the compound: A= oil-resistant rubber; N= natural para rubber; S= silicon

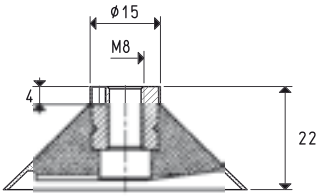

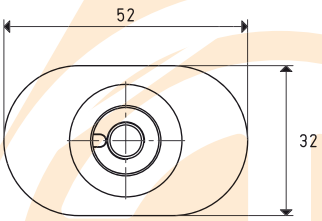

CUP WITH VULCANISED SUPPORT

Art.	Force Kg	Support material	Weight g
08 32 99 *	3.00	aluminium	11.9

* Complete the code indicating the compound: A= oil-resistant rubber; N= natural para rubber; S= silicon

Convertion ratio: inch = $\frac{mm}{25.4}$; pounds = $\frac{g}{453.6} = \frac{Kg}{0.4536}$

These cups have been designed for handling cylindrical objects, such as pipes, bottles, round profiles, etc.
Its aluminium support is vulanised onto the cup and it is provided with a central threaded hole to ease its fastening to the machine and with a side hole for the possible insertion of a guiding, anti-rotation pin.
These cups can be provided in the three standard compounds: oil-resistant rubber A, natural para rubber N and silicon S.

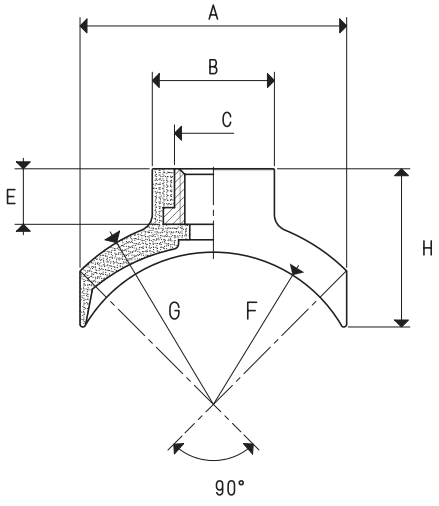

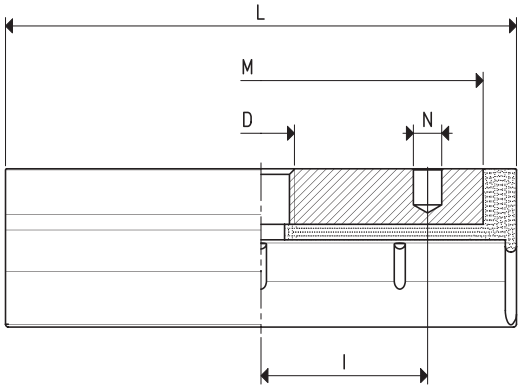

CONCAVE CUPS WITH VULCANISED SUPPORT

Art.	Force	gripping Ø		A	B	C	D	E	F	G	H	I	L	M	N	Support	Weight
	Kg	min	max				Ø								Ø	material	g
08 30 60 *	3.5	30	45	26	15	10	M8	8	16	19	20.0	20	60	50	4.1	aluminium	20.3
08 40 90 *	8.6	50	80	40	20	14	M12	10	23	28	25.0	30	92	80	5.1	aluminium	54.8
08 50 90 *	10.5	60	95	48	22	14	M12	10	28	34	28.5	30	92	80	5.1	aluminium	62.5

* Complete the code indicating the compound: A= oil-resistant rubber; N= natural para rubber; S= silicon

Convertion ratio: inch = $\frac{mm}{25.4}$; pounds = $\frac{g}{453.6} = \frac{Kg}{0.4536}$

The foam rubber used for our cups can be provided in sheets or strips of the sizes indicated in the table. Both the strips and the sheets have a self-adhesive side which allows a quick and easy fixing to the metal support. These sheets and strips can be used to make cups of every shape and to handle loads with raw or very rough surfaces. They can be supplied in different sizes and density upon request and in quantities to be defined in the order. The working temperature ranges from -40 °C to +80 °C.

***Note:** GERANIUM foam rubber is obtained from the expansion of a natural rubber via a chemical-thermal treatment. The surface porosity can, therefore, vary without affecting its efficiency.*

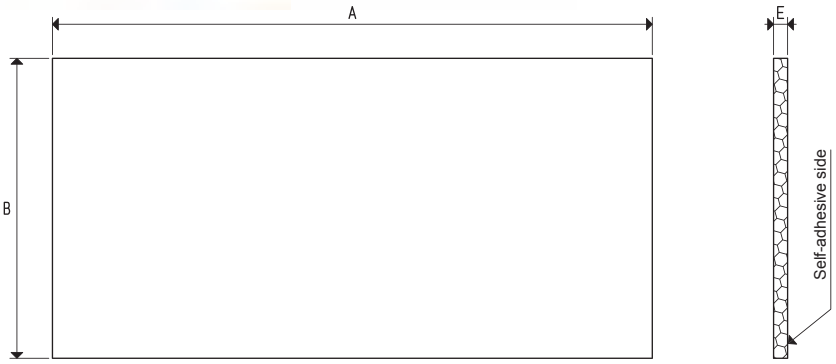

FOAM RUBBER SHEETS

Art.	A	B	E
LGS 10 OF	2000	900	10
LGS 15 OF	2000	900	15
LGS 20 OF	2000	900	20
LGS 25 OF	2000	900	25
LGS 30 OF	2000	900	30
LGS 40 OF	2000	900	40
LGS 45 OF	2000	900	45

Note: **minimum format**: mm 1000 x 900

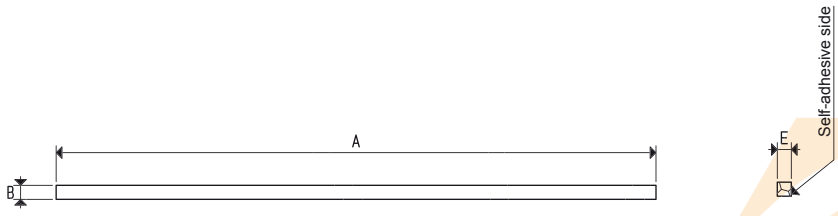

FOAM RUBBER STRIPS

Art.	A	B	E
SGS 10 10 OF	2000	10	10
SGS 15 10 OF	2000	15	10
SGS 20 10 OF	2000	20	10
SGS 20 15 OF	2000	20	15

Convertion ratio: inch = $\frac{mm}{25.4}$; pounds = $\frac{g}{453.6}$ = $\frac{Kg}{0.4536}$

3D drawings available at **www.vuototecnica.net**

BELLOW CUPS WITH MALE AND FEMALE SUPPORTS

The BELLOW CUPS described in these pages have been specially designed for handling baked goods, such as bisuits, bread, pizza, etc., as well as plastic or paper bags containing chocolates, sweets, pasta, flour, powder, etc.
Thanks to their great flexibility, they can also be used to compensate flatness errors or for gripping on inclined surfaces. Their anodised aluminium supports are provided with a threaded male or female central pin to allow suction and to fasten it to the machine.
The cups can be assembled onto them with no adhesives.
For the spare part, all you have to do is request the cup indicated in the table in the desired compound.

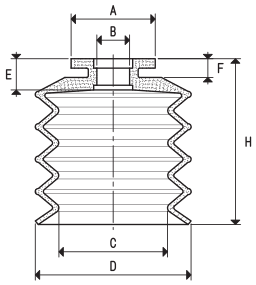

CUPS

Art.	Force	A	B	C	D	E	F	H
	Kg	Ø	Ø	Ø	Ø			
01 20 23 *	0.78	14.5	5.0	14	20	5	4	23
01 30 32 *	1.76	20.0	6.5	21	30	7	5	32
01 40 42 *	3.14	20.0	6.5	28	40	7	5	42
01 50 53 *	4.90	27.0	10.5	35	50	10	6	53

* Complete the code indicating the compound: A= oil-resistant rubber; N= natural para rubber; S= silicon

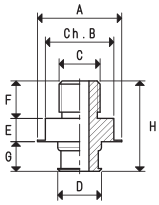

MALE SUPPORTS

Art.	A	B	C	D	E	F	G	H	Support material	Cup art.	Weight
	Ø		Ø	Ø							g
00 08 133	14.5	13	G1/8"	8.5	5.5	8	5.0	18.5	aluminium	01 20 23	3.5
00 08 135	20.0	17	G1/4"	10.0	7.5	12	7.5	27.0	aluminium	01 30 32 01 40 42	9.5
00 08 142	27.0	22	G1/4"	14.0	7.5	12	9.5	29.0	aluminium	01 50 53	15.7

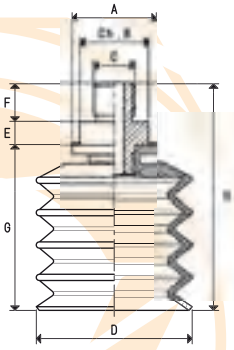

CUPS WITH MALE SUPPORTS

Art.	Force	A	B	C	D	E	F	G	H	Cup Art.	Support Art.	Weight
	Kg	Ø		Ø	Ø							g
08 20 23 *	0.78	14.5	13	G1/8"	20	5.5	8	23	36.5	01 20 23	00 08 133	5.3
08 30 32 *	1.76	20.0	17	G1/4"	30	7.5	12	32	51.5	01 30 32	00 08 135	15.1
08 40 42 *	3.14	20.0	17	G1/4"	40	7.5	12	42	61.5	01 40 42	00 08 135	21.1
08 50 53 *	4.90	27.0	22	G1/4"	50	7.5	12	53	72.5	01 50 53	00 08 142	40.1

* Complete the code indicating the compound: A= oil-resistant rubber; N= natural para rubber; S= silicon

Conversion ratio: inch = $\frac{mm}{25.4}$; pounds = $\frac{g}{453.6} = \frac{Kg}{0.4536}$

GAS - NPT thread adapters available at page 1.117

CUPS

Art.	Force Kg	A Ø	B Ø	C Ø	D Ø	E	F	H
01 20 23 *	0.78	14.5	5.0	14	20	5	4	23
01 30 32 *	1.76	20.0	6.5	21	30	7	5	32
01 40 42 *	3.14	20.0	6.5	28	40	7	5	42
01 50 53 *	4.90	27.0	10.5	35	50	10	6	53

* Complete the code indicating the compound: A= oil-resistant rubber; N= natural para rubber; S= silicon

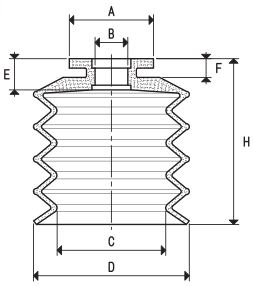

FEMALE SUPPORTS

Art.	A Ø	B	C Ø	D Ø	E	F	G	H	Support material	Cup art.	Weight g
00 08 132	14.5	13	G1/8"	8.5	12	8	5.0	17.0	aluminium	01 20 23	3.8
00 08 134	20.0	17	G1/4"	10.0	14	10	7.5	21.5	aluminium	01 30 32 01 40 42	8.3
00 08 141	27.0	22	G1/4"	14.0	14	10	9.5	23.5	aluminium	01 50 53	19.7

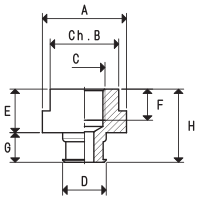

CUPS WITH FEMALE SUPPORT

Art.	Force Kg	A Ø	B	C Ø	D Ø	E	F	G	H	Cup Art.	Support Art.	Weight g
08 20 23 F *	0.78	14.5	13	G1/8"	20	12	8	23	35	01 20 23	00 08 132	5.6
08 30 32 F *	1.76	20.0	17	G1/4"	30	14	10	32	46	01 30 32	00 08 134	13.9
08 40 42 F *	3.14	20.0	17	G1/4"	40	14	10	42	56	01 40 42	00 08 134	19.9
08 50 53 F *	4.90	27.0	22	G1/4"	50	14	10	53	67	01 50 53	00 08 141	44.1

* Complete the code indicating the compound: A= oil-resistant rubber; N= natural para rubber; S= silicon

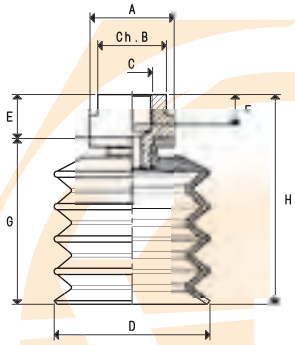

Conversion ratio: inch = $\frac{mm}{25.4}$; pounds = $\frac{g}{453.6} = \frac{Kg}{0.4536}$

GAS - NPT thread adapters available at page 1.117

REINFORCED BELLOW CUPS WITH MALE AND FEMALE SUPPORT

The particular shape of these BELLOW CUPS allows them to quickly crumple up when in contact with the surface of the load to be lifted and in presence of a vacuum. this quick movement prevents the load below from remaining stuck to the surfaces or load underneath.
Thanks to this particular feature, these BELLOW CUPS are recommended for handling paper and cardboard sheets, thin metal sheets, wooden panels, glass sheets etc.
Thanks to their great flexibility, they can also be used to compensate flatness errors or for gripping on inclined surfaces. Their anodised aluminium supports are provided with a threaded male or female central pin to allow suction and to fasten it to the machine.
The cups can be assembled onto them with no adhesives.
For the spare part, all you have to do is request the cup indicated in the table in the desired compound.

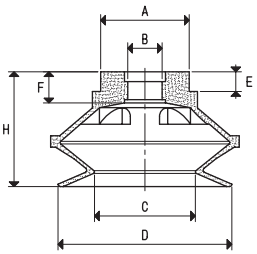

CUPS

Art.	Force	A	B	C	D	E	F	H
	Kg	Ø	Ø	Ø	Ø			
01 22 19 *	0.95	14.5	5.0	11.0	22	4	5.5	19
01 34 26 *	2.26	14.5	5.0	17.0	34	4	5.5	26
01 43 28 *	3.62	20.0	6.5	21.5	43	4	7.0	28
01 53 35 *	5.51	27.0	10.5	30.5	53	6	9.5	35

* Complete the code indicating the compound: A= oil-resistant rubber; N= natural para rubber; S= silicon

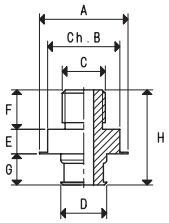

MALE SUPPORTS

Art.	A	B	C	D	E	F	G	H	Support material	Cup art.	Weight
	Ø		Ø	Ø							g
00 08 133	14.5	13	G1/8"	8.5	5.5	8	5.0	18.5	aluminium	01 22 19 01 34 26	3.5
00 08 135	20.0	17	G1/4"	10.0	7.5	12	7.5	27.0	aluminium	01 43 28	9.5
00 08 142	27.0	22	G1/4"	14.0	7.5	12	9.5	29.0	aluminium	01 53 35	15.7

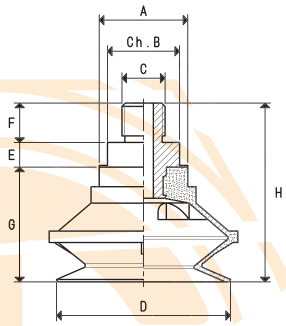

CUPS WITH MALE SUPPORT

Art.	Force	A	B	C	D	E	F	G	H	Cup Art.	Support Art.	Weight
	Kg	Ø		Ø	Ø							g
08 22 19 *	0.95	14.5	13	G1/8"	22	5.5	8	19	32.5	01 22 19	00 08 133	6.2
08 34 26 *	2.26	14.5	13	G1/8"	34	5.5	8	26	39.5	01 34 26	00 08 133	15.2
08 43 28 *	3.62	20.0	17	G1/4"	43	7.5	12	28	47.5	01 43 28	00 08 135	18.5
08 53 35 *	5.51	27.0	22	G1/4"	53	7.5	12	35	54.5	01 53 35	00 08 142	33.3

* Complete the code indicating the compound: A= oil-resistant rubber; N= natural para rubber; S= silicon

Conversion ratio: inch = $\frac{mm}{25.4}$; pounds = $\frac{g}{453.6} = \frac{Kg}{0.4536}$

GAS - NPT thread adapters available at page 1.117

CUPS

Art.	Force Kg	A Ø	B Ø	C Ø	D Ø	E	F	H
01 22 19 *	0.95	14.5	5.0	11.0	22	4	5.5	19
01 34 26 *	2.26	14.5	5.0	17.0	34	4	5.5	26
01 43 28 *	3.62	20.0	6.5	21.5	43	4	7.0	28
01 53 35 *	5.51	27.0	10.5	30.5	53	6	9.5	35

* Complete the code indicating the compound: A= oil-resistant rubber; N= natural para rubber; S= silicon

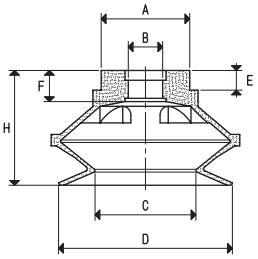

FEMALE SUPPORTS

Art.	A Ø	B	C Ø	D Ø	E	F	G	H	Support material	Cup art.	Weight g
00 08 132	14.5	13	G1/8"	8.5	8	12	5.0	17.0	aluminium	01 22 19 01 34 26	3.8
00 08 134	20.0	17	G1/4"	10.0	10	14	7.5	21.5	aluminium	01 43 28	8.3
00 08 141	27.0	22	G1/4"	14.0	10	14	9.5	23.5	aluminium	01 53 35	19.7

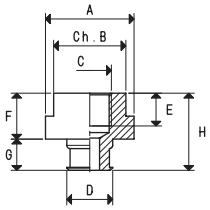

CUPS WITH FEMALE SUPPORT

Art.	Force Kg	A Ø	B	C Ø	D Ø	E	F	G	H	Cup Art.	Support Art.	Weight g
08 22 19 F *	0.95	14.5	13	G1/8"	22	8	12	19	31	01 22 19	00 08 132	6.5
08 34 26 F *	2.26	14.5	13	G1/8"	34	8	12	26	38	01 34 26	00 08 132	9.5
08 43 28 F *	3.62	20.0	17	G1/4"	43	10	14	28	42	01 43 28	00 08 134	17.3
08 53 35 F *	5.51	27.0	22	G1/4"	53	10	14	35	49	01 53 35	00 08 141	37.3

* Complete the code indicating the compound: A= oil-resistant rubber; N= natural para rubber; S= silicon

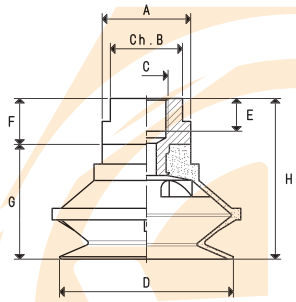

Conversion ratio: inch = $\frac{mm}{25.4}$; pounds = $\frac{g}{453.6} = \frac{Kg}{0.4536}$

GAS - NPT thread adapters available at page 1.117

The cups described in these pages share the same features with the previously described BELLOW CUPS, only these have larger dimensions that allow them to lift much heavier loads; moreover, their anodised aluminium supports also have a central threaded hole for their fastening to the machine. The larger ones also have an additional side hole for vacuum connection. The difference is that these supports are provided with a disc instead of with a pin.
These cups can be cold-assembled onto their supports with no adhesives.
For the spare part, all you have to do is request the cup indicated in the table in the desired compound.

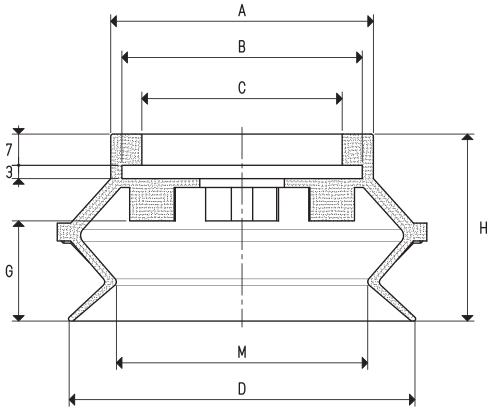

CUP

Art.	Force	A	B	C	D	G	H	M
	Kg	Ø	Ø	Ø	Ø			Ø
01 75 42 *	11.93	59	54	45	78	22.5	42	56

* Complete the code indicating the compound: A= oil-resistant rubber; N= natural para rubber; S= silicon

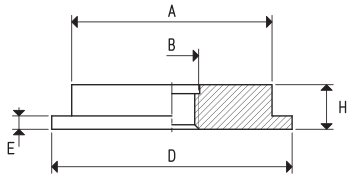

SUPPORTS

Art.	A	B	D	E	H	Support material	Cup art.	Weight
	Ø	Ø	Ø					g
00 08 126	45	M12	54	3	10	aluminium	01 75 42	45.5
00 08 143	45	G1/2"	54	3	10	aluminium	01 75 42	41.5

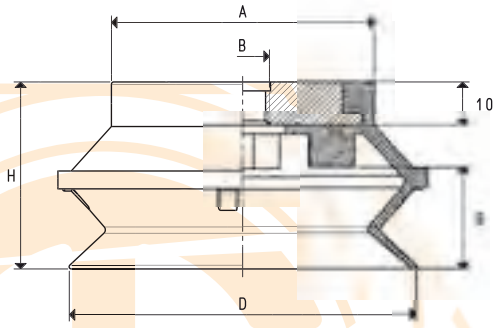

CUPS WITH SUPPORT

Art.	Force	A	B	D	G	H	Cup Art.	Support Art.	Weight
	Kg	Ø	Ø	Ø					g
08 75 42 *	11.93	59	M12	78	22.5	42	01 75 42	00 08 126	94.8
08 75 42 1/2" *	11.93	59	G1/2"	78	22.5	42	01 75 42	00 08 143	90.8

* Complete the code indicating the compound: A= oil-resistant rubber; N= natural para rubber; S= silicon

ratio: inch = $\frac{mm}{25.4}$; pounds = $\frac{g}{453.6} = \frac{Kg}{0.4536}$

GAS - NPT thread adapters available at page 1.117

CUPS

Art.	Force	A	B	C	D	G	H	M
	Kg	Ø	Ø	Ø	Ø			Ø
01 110 58 *	23.70	75	70	61	110	33	58	74
01 150 74 *	45.00	112	107	98	150	49	74	103

* Complete the code indicating the compound: A= oil-resistant rubber; N= natural para rubber; S= silicon

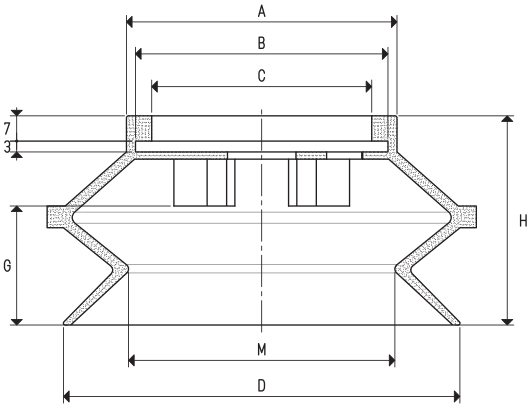

SUPPORTS

Art.	A	B	C	D	E	N	H	Support material	Cup art.	Weight
	Ø	Ø	Ø	Ø						g
00 08 162	61	G1/2"	G1/8"	70	3	23	10	aluminium	01 110 58	78.9
00 08 163	98	G1/2"	G1/8"	107	3	35	10	aluminium	01 150 74	211.8

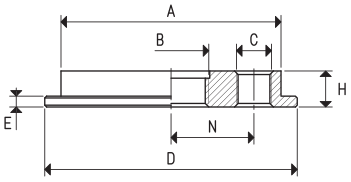

CUPS WITH SUPPORT

Art.	Force	A	B	C	D	H	N	Cup. Art.	Support Art.	Weight
	Kg	Ø	Ø	Ø	Ø					g
08 110 58 *	23.70	75	G1/2"	G1/8"	110	58	23	01 110 58	00 08 162	190.7
08 150 74 *	45.00	112	G1/2"	G1/8"	150	74	35	01 150 74	00 08 163	458.7

* Complete the code indicating the compound: A= oil-resistant rubber; N= natural para rubber; S= silicon

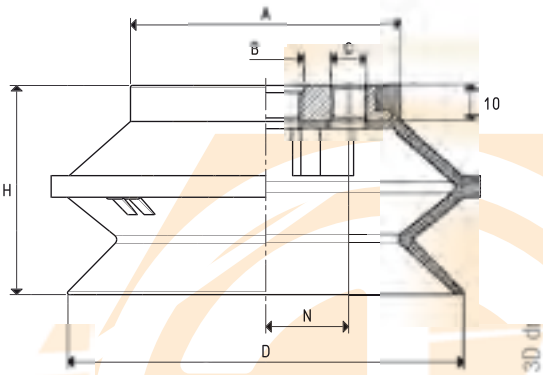

Conversion ratio: inch = $\frac{mm}{25.4}$; pounds = $\frac{g}{453.6}$ = $\frac{Kg}{0.4536}$

GAS - NPT thread adapters available at page 1.117

This range of cups has been designed for gripping vertically stocked glass sheets. By laying the cup on the glass surface and opening the vacuum, the sheet will place itself orthogonally to the floor perfectly adhering to the cup internal face. The glass sheet can then be handled in any direction in full safety.

Their aluminium aluminium support has a central threaded hole for fastening it to the machine and for the vacuum connection. The cups can be cold-assembled onto their support with no adhesives.

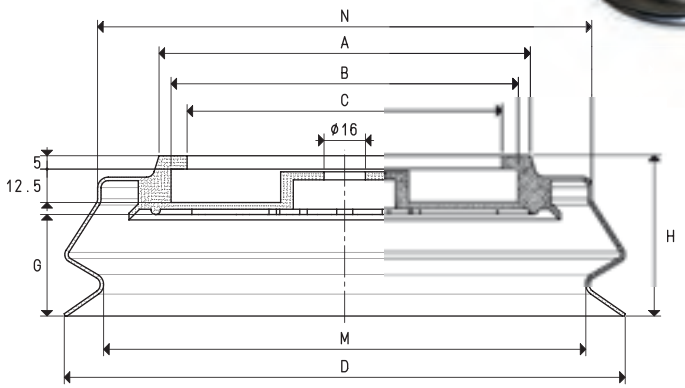

CUPS

Art.	Force Kg	A Ø	B Ø	C Ø	D Ø	G	H	M Ø	N Ø
01 150 55 *	45.00	78	70	58	150	33	55	120	125
01 210 60 *	86.50	138	130	118	210	38	61	180	185

* Complete the code indicating the compound: A= oil-resistant rubber; N= natural para rubber; S= silicon

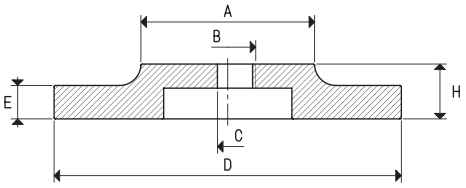

SUPPORTS

Art.	A Ø	B Ø	C Ø	D Ø	E	H	Support material	Cup art.	Weight g
00 08 280	35	G1/2"	--	70	12.5	22.5	aluminium	01 150 55	120
00 08 281	65	G1/2"	--	130	12.5	23.5	aluminium	01 210 60	465
00 08 286	35	---	8	70	12.5	22.5	aluminium	01 150 55	125
00 08 287	65	---	8	130	12.5	23.5	aluminium	01 210 60	470

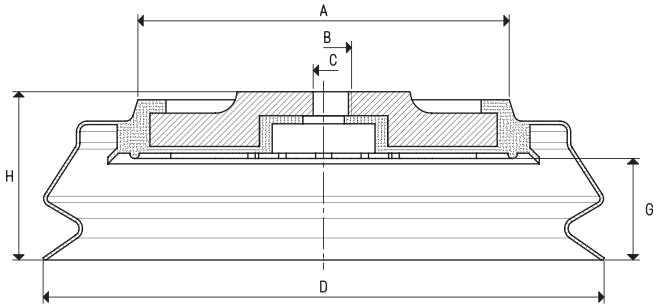

CUPS WITH SUPPORT

Art.	Force Kg	A Ø	B Ø	C Ø	D Ø	G	H	Cup Art.	Support Art.	Weight g
08 150 55 *	45.00	78	G1/2"	--	150	33	60	01 150 55	00 08 280	245
08 210 60 *	86.50	138	G1/2"	--	210	38	67	01 210 60	00 08 281	650
08 150 56 *	45.00	78	---	8	150	33	60	01 150 55	00 08 286	250
08 210 61 *	86.50	138	---	8	210	38	67	01 210 60	00 08 287	655

* Complete the code indicating the compound: A= oil-resistant rubber; N= natural para rubber; S= silicon

Conversion ratio: inch = $\frac{mm}{25.4}$; pounds = $\frac{g}{453.6} = \frac{Kg}{0.4536}$

GAS - NPT thread adapters available at page 1.117

VACUUM CUP WITH ONE BELLOW AND WITH VULCANISED SUPPORT

The cups described in this page, unlike the previous ones, are vulcanised onto an aluminium hexagonal support with a male or female threaded connector, inside of which there is an M8 threaded hole for the possible insertion of a calibrated grub screw (see page 1.118).

The main feature of these BELLOW CUPS is that they quickly crumple up during the grip, thus lifting the load for a few centimetres, independently of the movements of the lifting frame; this quick movement avoids that the load beneath,remains stuck to the lifted one.

Due to this feature they are particularly suited for handling thin metal sheets, glass sheets, chipboard or compressed wood panels,laminated plastic etc.

Due to their high flexibility they can also be used to compensate flatness errors or for the grip of inclined surfaces.

These cups are available in the standard compounds and can be supplied in special compounds listed at page 21 in minimum amounts to be defined in the order.

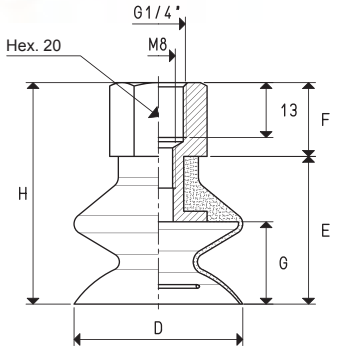

CUPS WITH ONE BELLOW WITH FEMALE VULCANISED SUPPORT

Art.	Force Kg	D Ø	E	F	G	H	Support material	Weight g
08 40 30 *	3.14	40	35	17	18	52	aluminium	32.4
08 50 30 *	4.90	50	37	17	20	54	aluminium	40.9
08 60 30 *	7.06	60	39	17	21	56	aluminium	53.6
08 85 30 *	14.08	85	50	17	31	67	aluminium	122.0

* Complete the code indicating the compound: A= oil-resistant rubber; N= natural para rubber; S= silicon

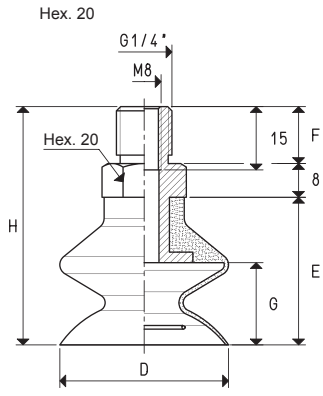

CUPS WITH ONE BELLOW WITH MALE VULCANISED SUPPORT

Art.	Force Kg	D Ø	E	F	G	H	Support material	Weight g
08 40 30 M *	3.14	40	35	13.5	18	56.5	aluminium	29.1
08 50 30 M *	4.90	50	37	13.5	20	58.5	aluminium	39.0
08 60 30 M *	7.06	60	39	13.5	21	60.5	aluminium	51.2
08 85 30 M *	14.08	85	50	13.5	31	71.5	aluminium	115.0

* Complete the code indicating the compound: A= oil-resistant rubber; N= natural para rubber; S= silicon

Conversion ratio: inch = $\frac{mm}{25.4}$; pounds = $\frac{g}{453.6} = \frac{Kg}{0.4536}$

GAS - NPT thread adapters available at page 1.117

These cups are the same as the ones described in the previous page, only with an additional bellow.
The technical features and availability are the same.

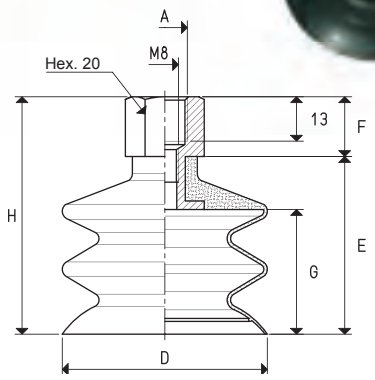

CUPS WITH TWO BELLOWS WITH VULCANISED FEMALE SUPPORT

Art.	Force Kg	A Ø	D Ø	E	F	G	H	Support material	Weight g
08 40 60 *	3.14	G1/4"	40	52	17	35	69	aluminium	39.6
08 50 50 *	4.90	G1/4"	50	55	17	38	72	aluminium	49.6
08 60 50 *	7.06	G1/4"	60	58	17	41	75	aluminium	72.4
08 60 50M12 *	7.06	M12	60	58	17	41	75	aluminium	73.0
08 85 50 *	14.08	G1/4"	85	78	17	58	95	aluminium	168.0
08 85 50M12 *	14.08	M12	85	78	17	58	95	aluminium	169.0

* Complete the code indicating the compound: A= oil-resistant rubber; N= natural para rubber; S= silicon

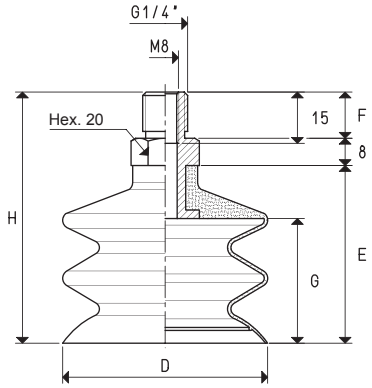

CUPS WITH TWO BELLOWS WITH VULCANISED MALE SUPPORT

Art.	Force Kg	D Ø	E	F	G	H	Support material	Weight g
08 40 60M *	3.14	40	52	13.5	35	73.5	aluminium	35.5
08 50 50M *	4.90	50	55	13.5	38	76.5	aluminium	49.3
08 60 50M *	7.06	60	58	13.5	41	79.5	aluminium	66.0
08 85 50M *	14.08	85	78	13.5	58	99.5	aluminium	157.0

* Complete the code indicating the compound: A= oil-resistant rubber; N= natural para rubber; S= silicon

Conversion ratio: inch = $\frac{mm}{25.4}$; pounds = $\frac{g}{453.6} = \frac{Kg}{0.4536}$

GAS - NPT thread adapters available at page 1.117

The main feature of these BELLOW CUPS is that they quickly crumple up during the grip, thus lifting the load for a few centimetres, independently of the movements of the lifting frame; this quick movement avoids that the load beneath,remains stuck to the lifted one.

Due to this feature they are particularly suited for handling thin metal sheets, glass sheets, chipboard or compressed wood panels,laminated plastic etc.

Due to their high flexibility they can also be used to compensate flatness errors or for the grip of inclined surfaces.

These BELLOW CUPS are vulcanised onto a galvanised steel or aluminium support provided with a central threaded hole for fastening it to the machine and a side one for the vacuum connection or for detecting the vacuum level. Also these cups are available in the three standard compounds.

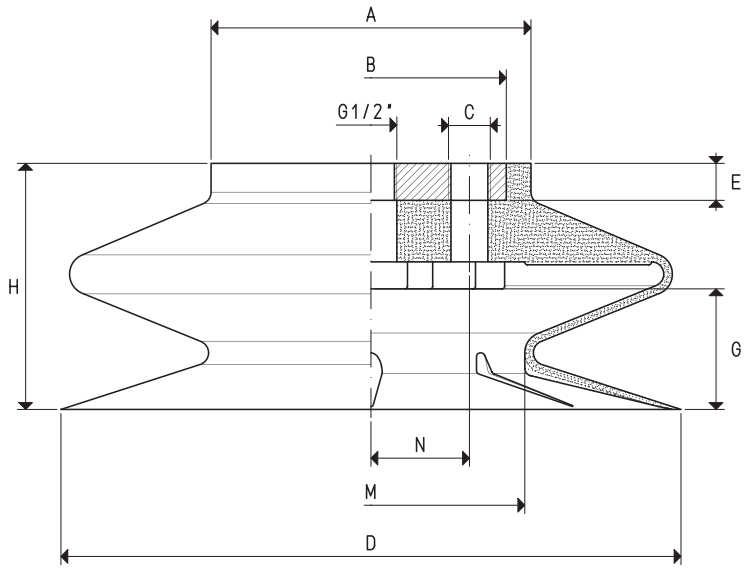

BELLOW CUP WITH VULCANISED SUPPORT

Art.	Force Kg	A Ø	B Ø	C Ø	D Ø	E	G	H	M Ø	N	Support material	Weight Kg
08 110 30 *	23.7	78	65	G1/8"	110	10	23	45	55	23	steel	0.35
08 150 30 *	45.0	78	65	G1/8"	150	10	33	60	75	23	steel	0.49
08 180 30 *	63.5	94	80	G1/8"	180	10	33	70	84	30	steel	0.81
08 250 30 *	122.6	130	100	G3/8"	250	15	49	100	125	35	aluminium	1.54

* Complete the code indicating the compound: A= oil-resistant rubber; N= natural para rubber; S= silicon

Conversion ratio: inch = $\frac{mm}{25.4}$; pounds = $\frac{g}{453.6} = \frac{Kg}{0.4536}$

GAS - NPT thread adapters available at page 1.117